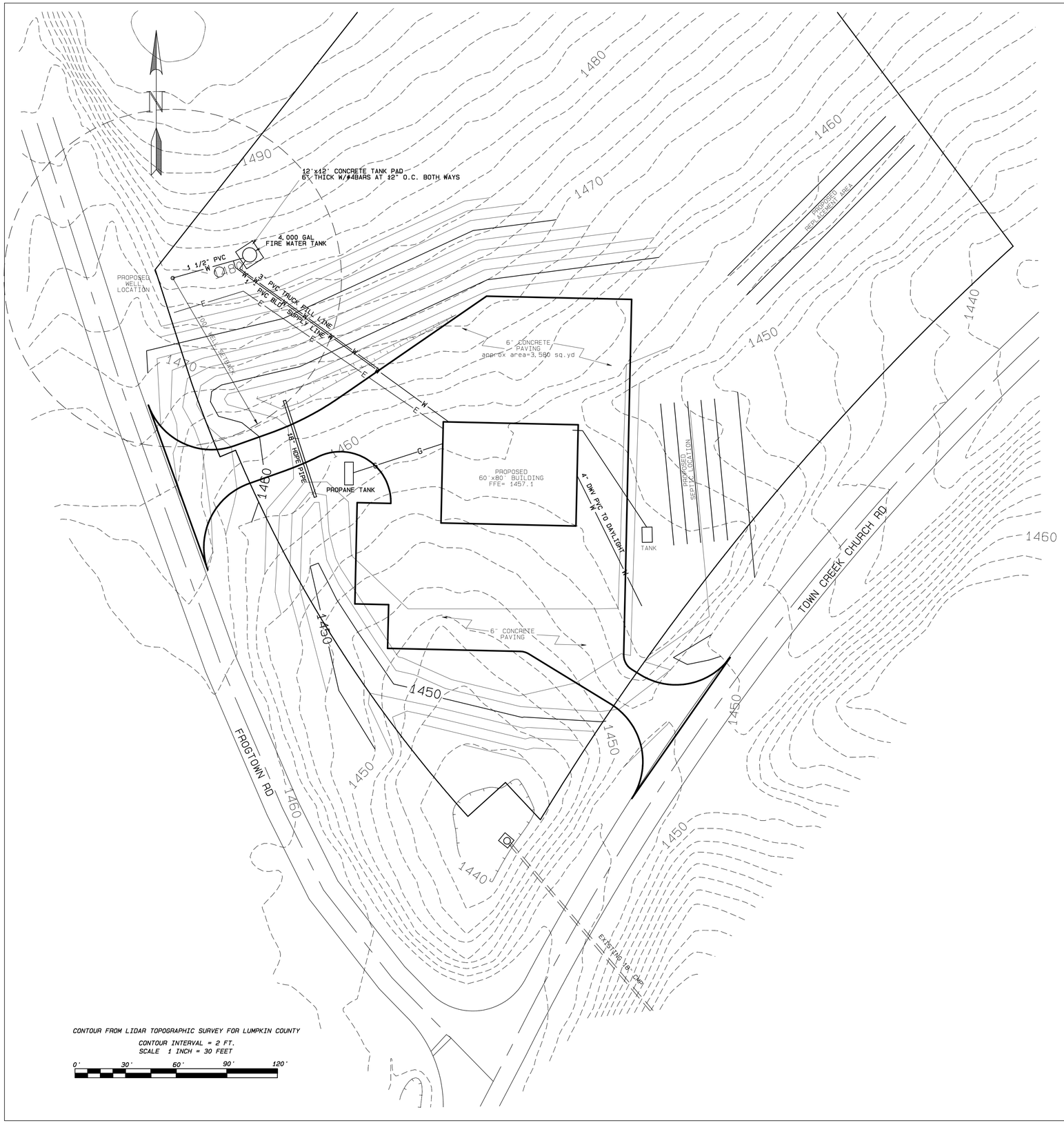

CONTOUR FROM LIDAR TOPOGRAPHIC SURVEY FOR LUMPKIN COUNTY

CONTOUR INTERVAL = 2 FT.
SCALE 1 INCH = 30 FEET

0' 30' 60' 90' 120'

SEPTIC DESIGN INFORMATION:

FLOW CALCULATIONS:
6 PERSON 24 HRS PER DAY @100 GPD EA= 600 GPD
2 DAY STAFF @ 40 GPD EA= 80
WASHING MACHINE @ 500 GPD

USE 1200 GPD
TANK =1500 GAL

ASSUME PREC =65 (TO BE DETERMINE BY SOIL TEST)
TABLE DT-1 , 0.620 GAL/SQFT
TRENCH WIDTH=3'
1200 GPD/(.62*3)= 645' GRAVEL SYSTEM
65% OF GRAVEL = 420' CHAMBER SYSTEM

DRAWN BY: LR/CD

DRAWING NO. 1

SHEET 1 OF 12

DRAWING TITLE
UTILITY PLAN AND DETAILS
LUMPKIN COUNTY FIRE STATION 7
TOWN CREEK CHURCH ROAD
DAHLONEGA, GEORGIA 30533

DRW NAME: SLAB PLAN

DATE: August 15, 2014

REVISIONS

DATE	DESCRIPTION
9/19/14	REVISED WATER SYSTEM AND PROPANE TANK LOCATIONS. ADDED APPROXIMATE AREA OF PAVING. REVISED FLOOR DRAIN PIPE LOCATION.

Lumpkin County Engineering
25 Short Street, Suite 10
Dahlonega, Ga 30533
Office: 706-864-6894
Fax: 706-867-7272

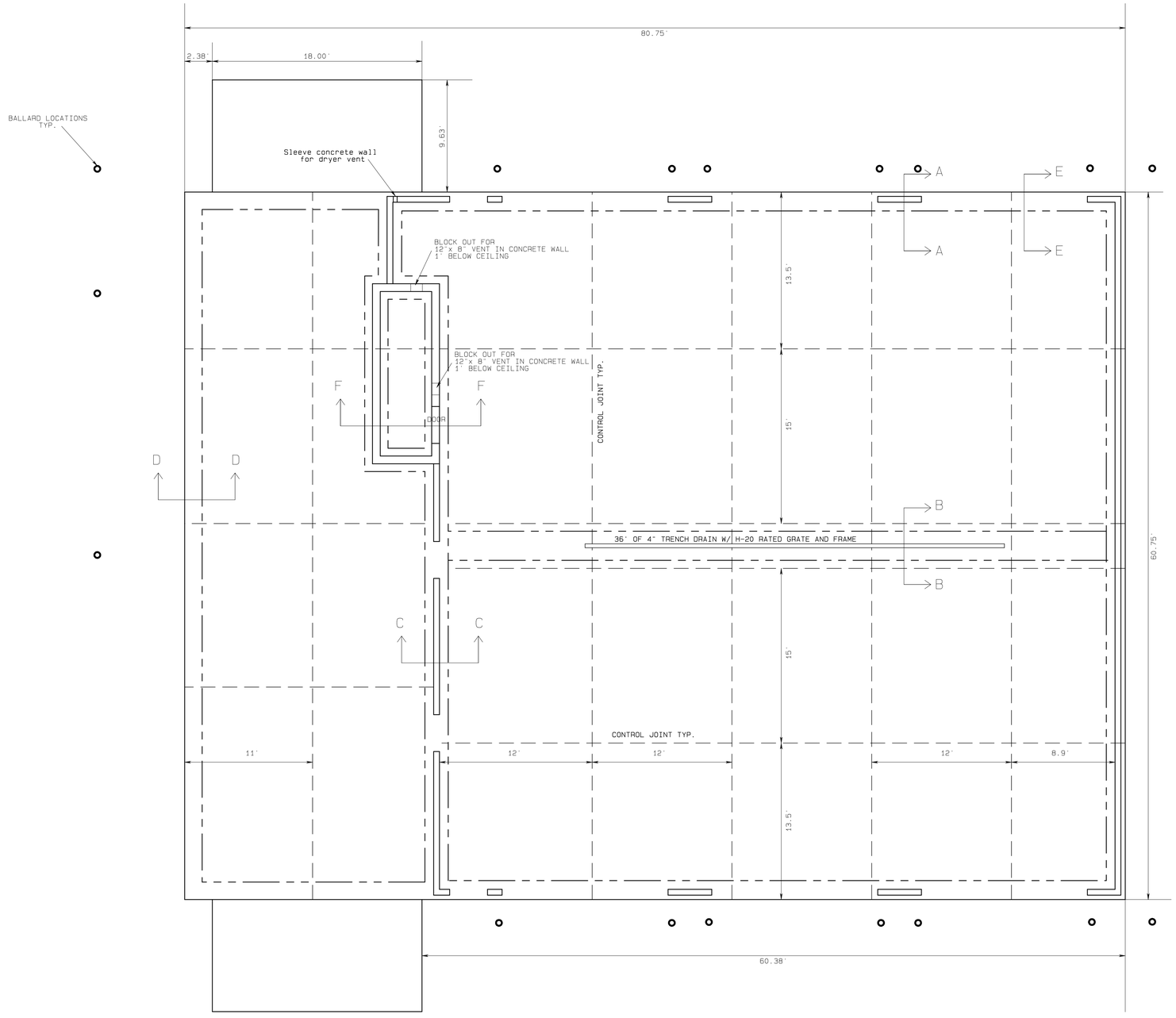

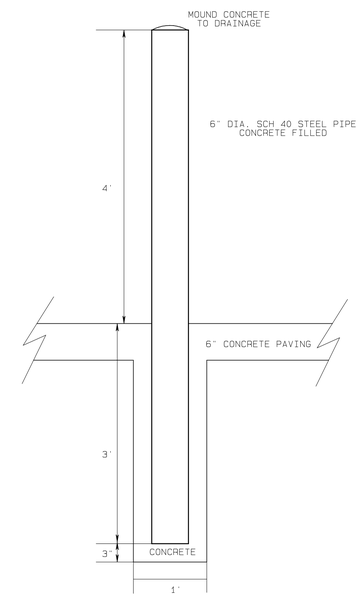

BOLLARD DETAIL

SCALE: 1"=1'

SCALE 1 INCH = 5 FEET

0' 5' 10' 15' 20'

DRAWN BY: LR/CD

DRAWING NO. 1

SHEET 2 OF 12

DRAWING TITLE

CONCRETE SLAB PLAN

LUMPKIN COUNTY FIRE STATION 7
TOWN CREEK CHURCH ROAD
DAHLONEGA, GEORGIA 30533

DRW NAME: SLAB PLAN

DATE: August 15, 2014

REVISIONS

DATE	DESCRIPTION
9/22/14	REVISED FOOTING AND SLAB DESIGN, ADDED CONCRETE GEAR STORAGE ROOM ADDED BOLLARD LOCATION AND DETAIL

Lumpkin County Engineering
25 Short Street, Suite 10
Dahlonega, Ga 30533
Office: 706-864-6894
Fax: 706-867-7272

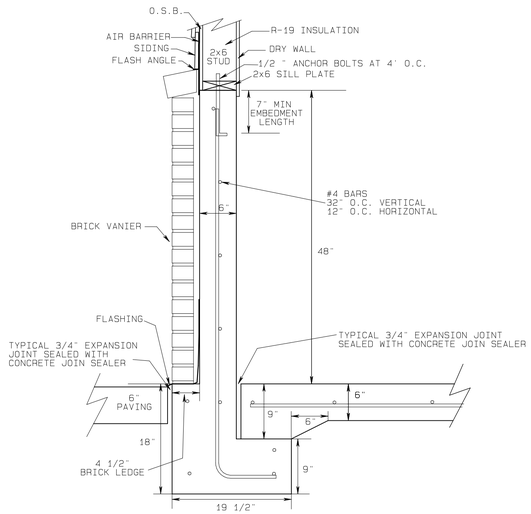

SECTION A-A: SLAB AND FOOTING WALL DETAIL

SCALE: 1"=1'

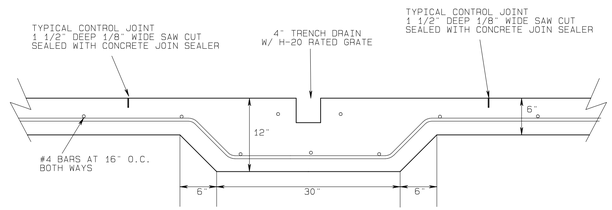

SECTION B-B: TRENCH DRAIN FOOTING DETAIL

SCALE: 1"=1'

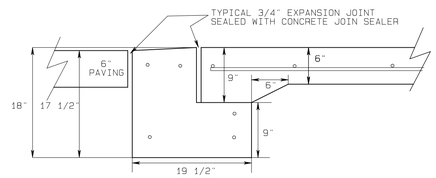

SECTION E-E: SLAB AND FOOTING AT DOOR DETAIL

SCALE: 1"=1'

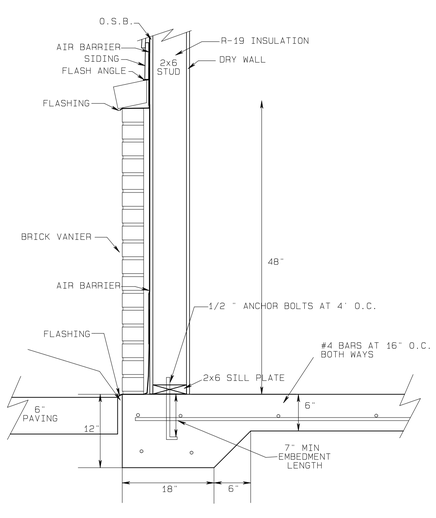

SECTION D-D: SLAB AND WALL DETAIL

SCALE: 1"=1'

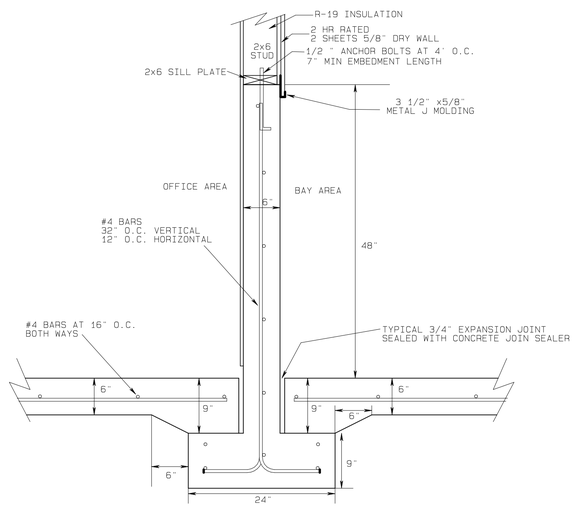

SECTION C-C: SLAB AND FOOTING WALL DETAIL

SCALE: 1"=1'

WS6-2.1 Two-Hour Fire-Resistive Wood-Frame Wall Assembly

2x6 Wood Stud Wall - 100% Design Load - ASTM E 119 / NFPA 251

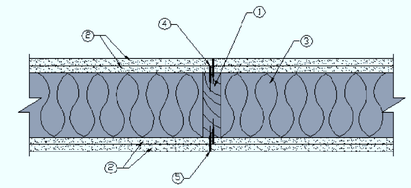

1. Framing - Nominal 2x6 wood studs, spaced 16 in. o.c., double top plates, single bottom plate.
2. Sheathing:
   Base Layer - 5/8 in. Type X gypsum wallboard, 4 ft. wide, applied horizontally, joints staggered on opposite sides of the wall.
   Face Layer - 5/8 in. Type X gypsum wallboard, 4 ft. wide, applied horizontally, joints staggered with base layer.
   Horizontal joints are unblocked. Horizontal application of wallboard represents the direction of least fire resistance as opposed to vertical application.
3. Insulation - 5-1/2 in. thick mineral wool insulation (2.5 pcf, nominal)
4. Gypsum Fasteners: Base Layer - 2-1/4 in. #6 Type S drywall screws, spaced 24 in. o.c.
5. Gypsum Fasteners: Face Layer - 2-1/4 in. #6 Type S drywall screws, spaced 8 in. o.c.
6. Joints and Fastener Heads - Wallboard joints covered with paper tape and joint compound, fastener heads covered with joint compound

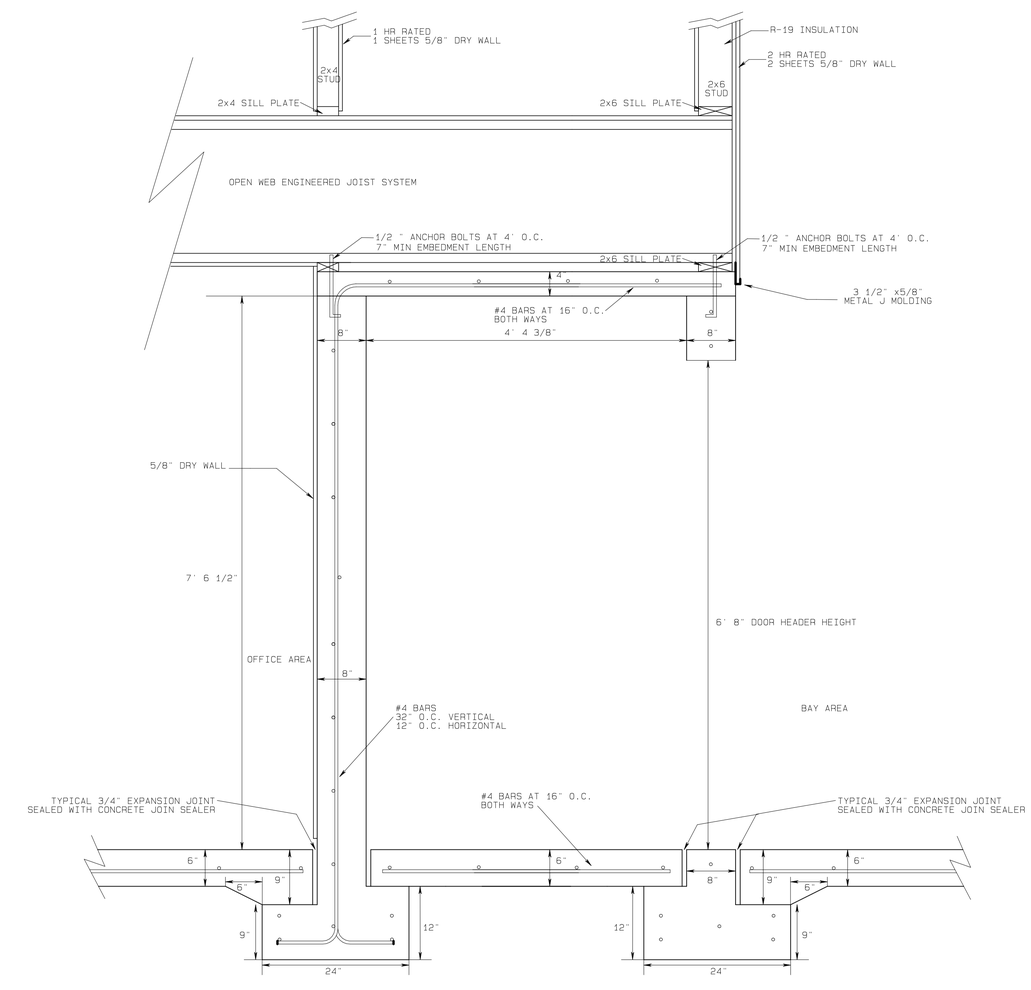

DETAIL GEER STORAGE ROOM

SCALE: 1"=1'

DRAWN BY: LR/CD

DRAWING NO. 1

SHEET 3 OF 12

DRAWING TITLE

CONSTRUCTION DETAILS

LUMPKIN COUNTY FIRE STATION 7
TOWN CREEK CHURCH ROAD
DAHLONEGA, GEORGIA 30533

DRW NAME: SLAB PLAN

DATE: August 15, 2014

REVISIONS

DATE	DESCRIPTION
9/22/14	REVISED FOOTING AND SLAB DESIGN, ADDED CONCRETE GEAR STORAGE ROOM AND FIREWALL DETAIL

Lumpkin County Engineering
25 Short Street, Suite 10
Dahlonega, Ga 30533
Office: 706-864-6894
Fax: 706-867-7272

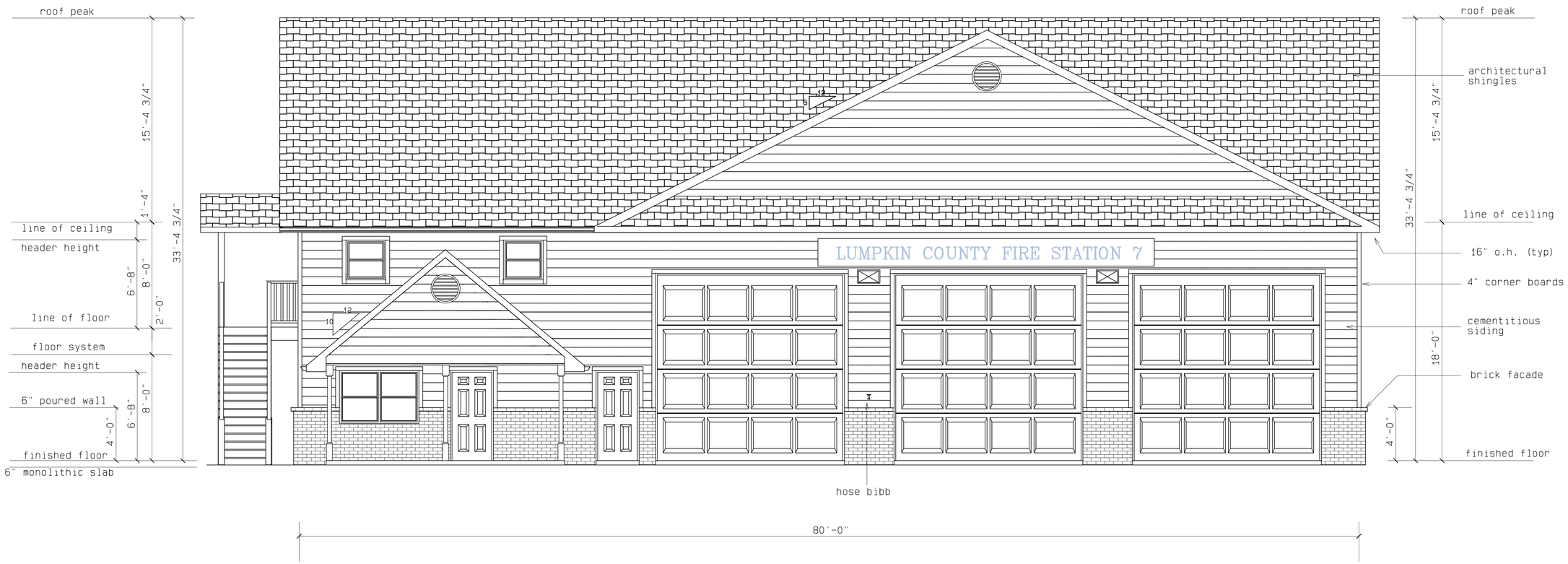

FRONT ELEVATION

SCALE 1/4" = 1'-0"

DRAWN BY: LR/CD

DRAWING NO. 1

SHEET 4 OF 12

DRAWING TITLE

FRONT ELEVATION

LUMPKIN COUNTY FIRE STATION 7
TOWN CREEK CHURCH ROAD
DAHLONEGA, GEORGIA 30533

DRW NAME: SLAB PLAN

DATE: August 15, 2014

REVISIONS

DATE	DESCRIPTION

Lumpkin County Engineering
25 Short Street, Suite 10
Dahlonega, Ga 30533
Office: 706-864-6894
Fax: 706-867-7272

LEFT ELEVATION

SCALE 1/4" = 1'-0"

DRAWN BY: LR/CD

DRAWING NO. 1

SHEET 5 OF 12

DRAWING TITLE

LEFT ELEVATION

LUMPKIN COUNTY FIRE STATION 7
TOWN CREEK CHURCH ROAD
DAHLONEGA, GEORGIA 30533

DRW NAME: SLAB PLAN

DATE: August 15, 2014

REVISIONS

DATE	DESCRIPTION

Lumpkin County Engineering
25 Short Street, Suite 10
Dahlonega, Ga 30533
Office: 706-864-6894
Fax: 706-867-7272

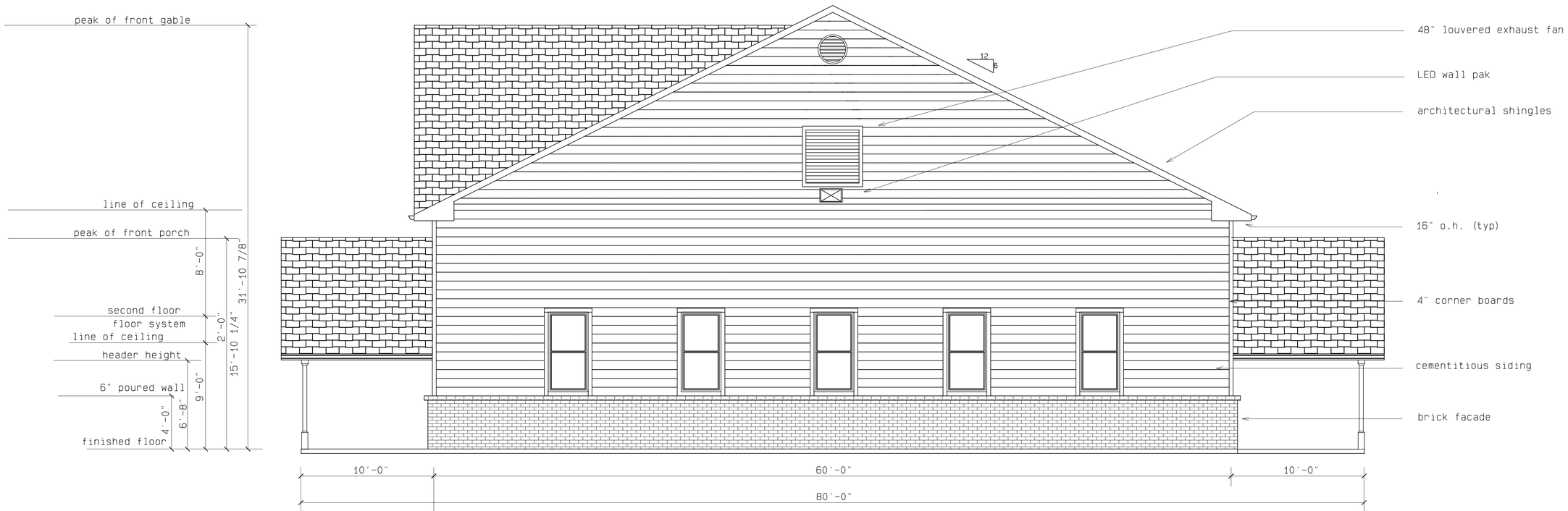

RIGHT ELEVATION

SCALE 1/4" = 1'-0"

DRAWN BY: LR/CD

DRAWING NO. 1

SHEET 6 OF 12

DRAWING TITLE

RIGHT ELEVATION

LUMPKIN COUNTY FIRE STATION 7
TOWN CREEK CHURCH ROAD
DAHLONEGA, GEORGIA 30533

DRW NAME: SLAB PLAN

DATE: August 15, 2014

REVISIONS

DATE	DESCRIPTION

Lumpkin County Engineering
25 Short Street, Suite 10
Dahlonega, Ga 30533
Office: 706-864-6894
Fax: 706-867-7272

REAR ELEVATION

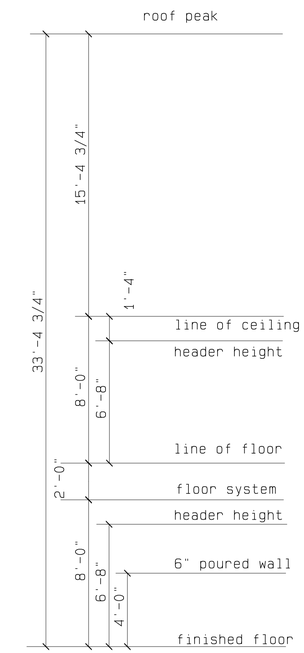

SCALE 1/4" = 1'-0"

DRAWN BY: LR/CD

DRAWING NO. 1

SHEET 7 OF 12

DRAWING TITLE

REAR ELEVATION

LUMPKIN COUNTY FIRE STATION 7
TOWN CREEK CHURCH ROAD
DAHLONEGA, GEORGIA 30533

DRW NAME: SLAB PLAN

DATE: August 15, 2014

REVISIONS

DATE	DESCRIPTION

Lumpkin County Engineering
25 Short Street, Suite 10
Dahlonega, Ga 30533
Office: 706-864-6894
Fax: 706-867-7272

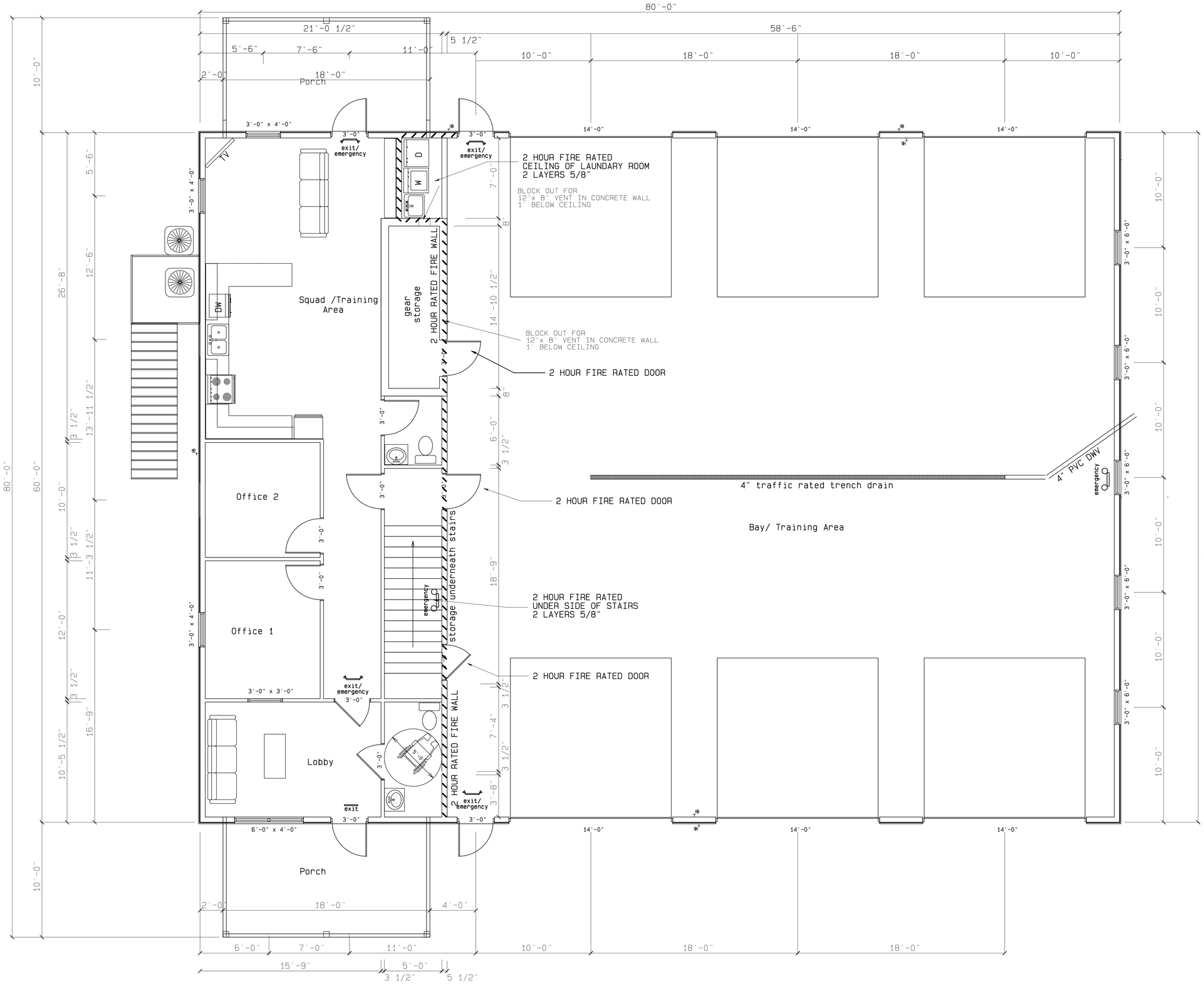

SCALE 1/4" = 1'-0"

DRAWN BY: LR/CD	DRAWING NO. 1	SHEET 8 OF 12

DRAWING TITLE

MAIN FLOOR PLAN

LUMPKIN COUNTY FIRE STATION 7
TOWN CREEK CHURCH ROAD
DAHLONEGA, GEORGIA 30533

DRW NAME: SLAB PLAN | DATE: August 15, 2014

REVISIONS

DATE	DESCRIPTION
9/22/14	REVISED GEAR STORAGE ROOM WALLS

Lumpkin County Engineering
25 Short Street, Suite 10
Dahlonega, Ga 30533
Office: 706-864-6894
Fax: 706-867-7272

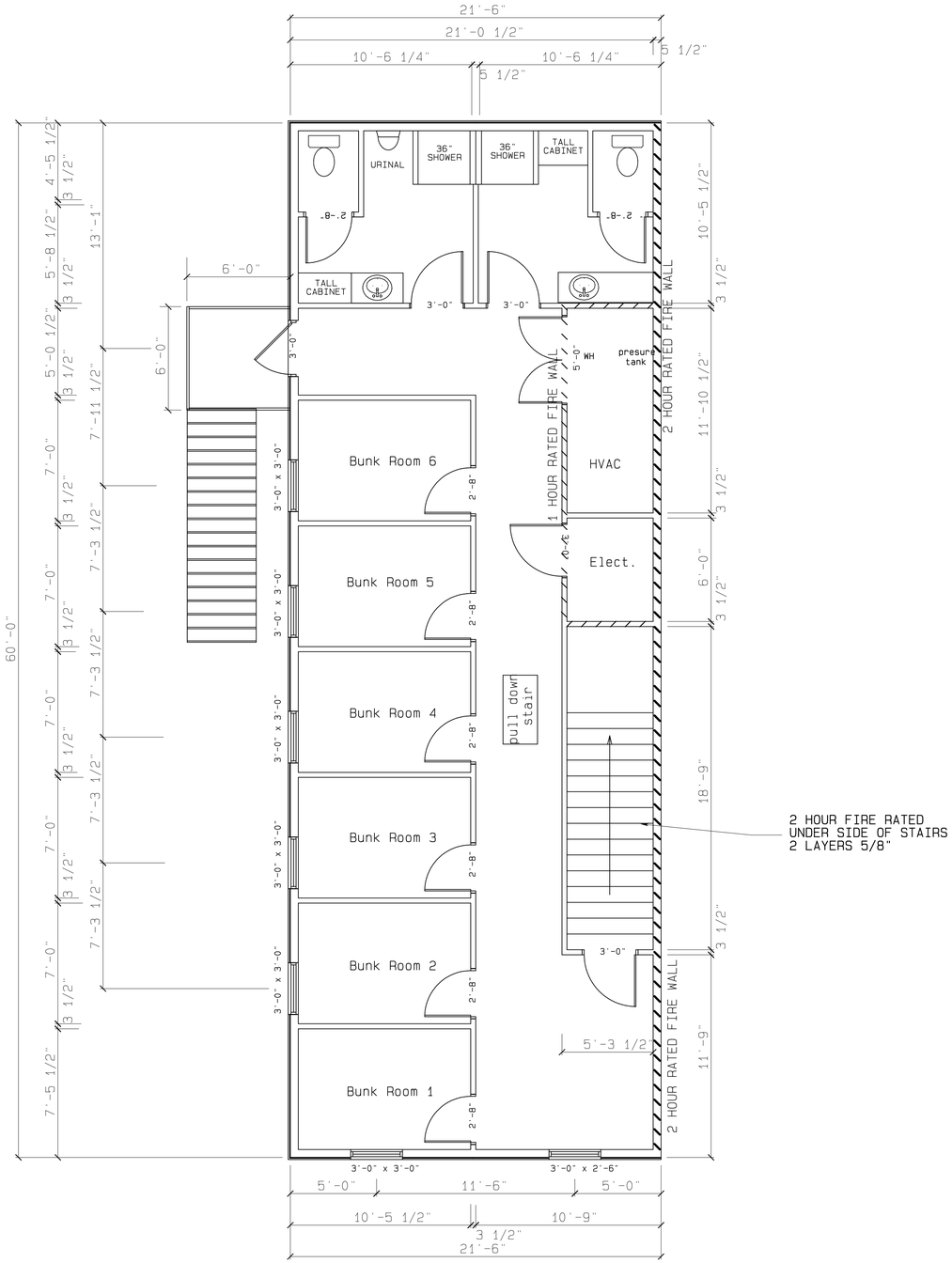

SCALE 1/4" = 1'-0"

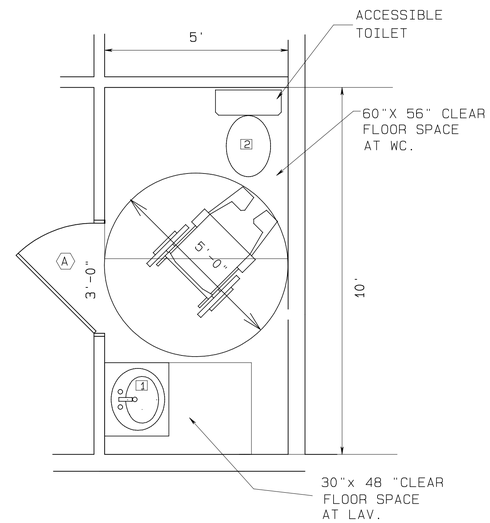

ACCESSIBLE TOILET PLAN

SCALE: 1" = 2'

TOILET ROOM KEY.

1 ACCESSIBLE SINK

2 ACCESSIBLE WATER CLOSET

A 3'-0" X 6'-8"X 1 3/4"
S.C. DOOR WITH LEVER ACTING
HARDWARE AND PRIVACY LOCK SET

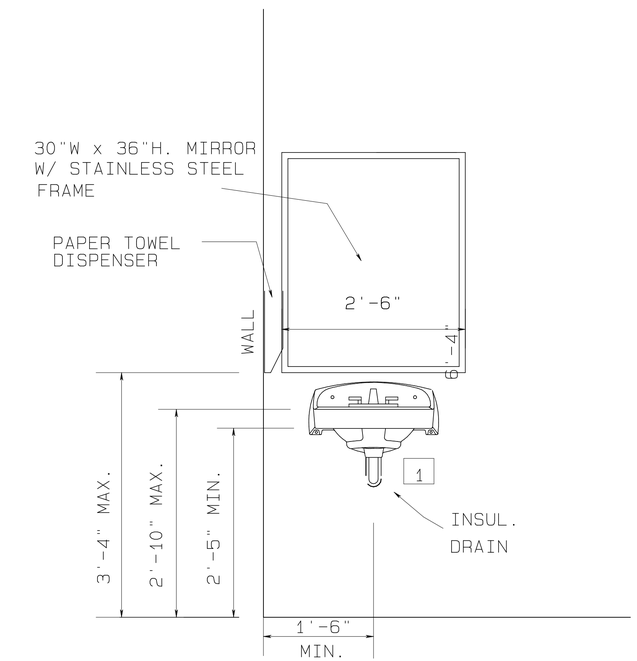

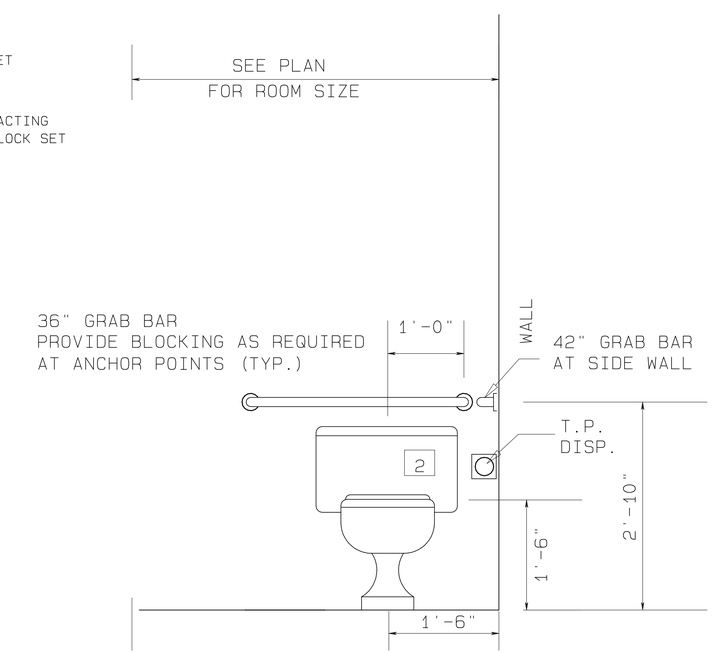

ACCESSIBLE TOILET ELEVATION

SCALE: 1/2" = 1'-0"

DRAWN BY: LR/CD

DRAWING NO. 1

SHEET 9 OF 12

DRAWING TITLE

SECOND FLOOR PLAN

LUMPKIN COUNTY FIRE STATION 7
TOWN CREEK CHURCH ROAD
DAHLONEGA, GEORGIA 30533

DRW NAME: SLAB PLAN

DATE: August 15, 2014

REVISIONS

DATE	DESCRIPTION
9/24/14	ADDED ADA TOILET DETAILS

Lumpkin County Engineering
25 Short Street, Suite 10
Dahlonega, Ga 30533
Office: 706-864-6894
Fax: 706-867-7272

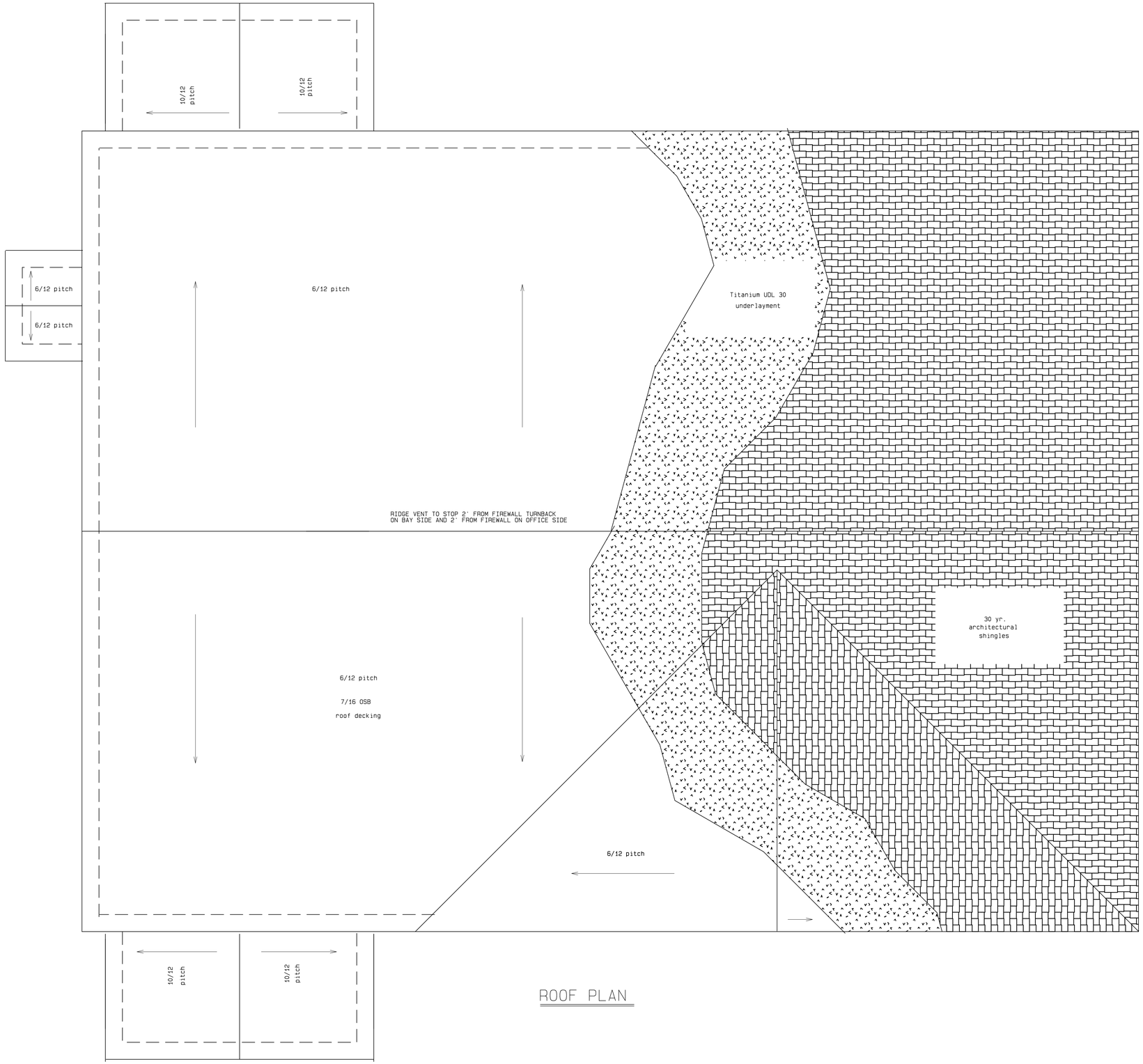

ROOF PLAN

SCALE 1/4" = 1'-0"

DRAWN BY: LR/CD

DRAWING NO. 1

SHEET 10 OF 12

DRAWING TITLE

ROOF PLAN

LUMPKIN COUNTY FIRE STATION 7
TOWN CREEK CHURCH ROAD
DAHLONEGA, GEORGIA 30533

DRW NAME: SLAB PLAN

DATE: August 15, 2014

REVISIONS

DATE	DESCRIPTION
9/22/14	REVISED RIDGE VENT LOCATION NOTE

Lumpkin County Engineering
25 Short Street, Suite 10
Dahlonega, Ga 30533
Office: 706-864-6894
Fax: 706-867-7272

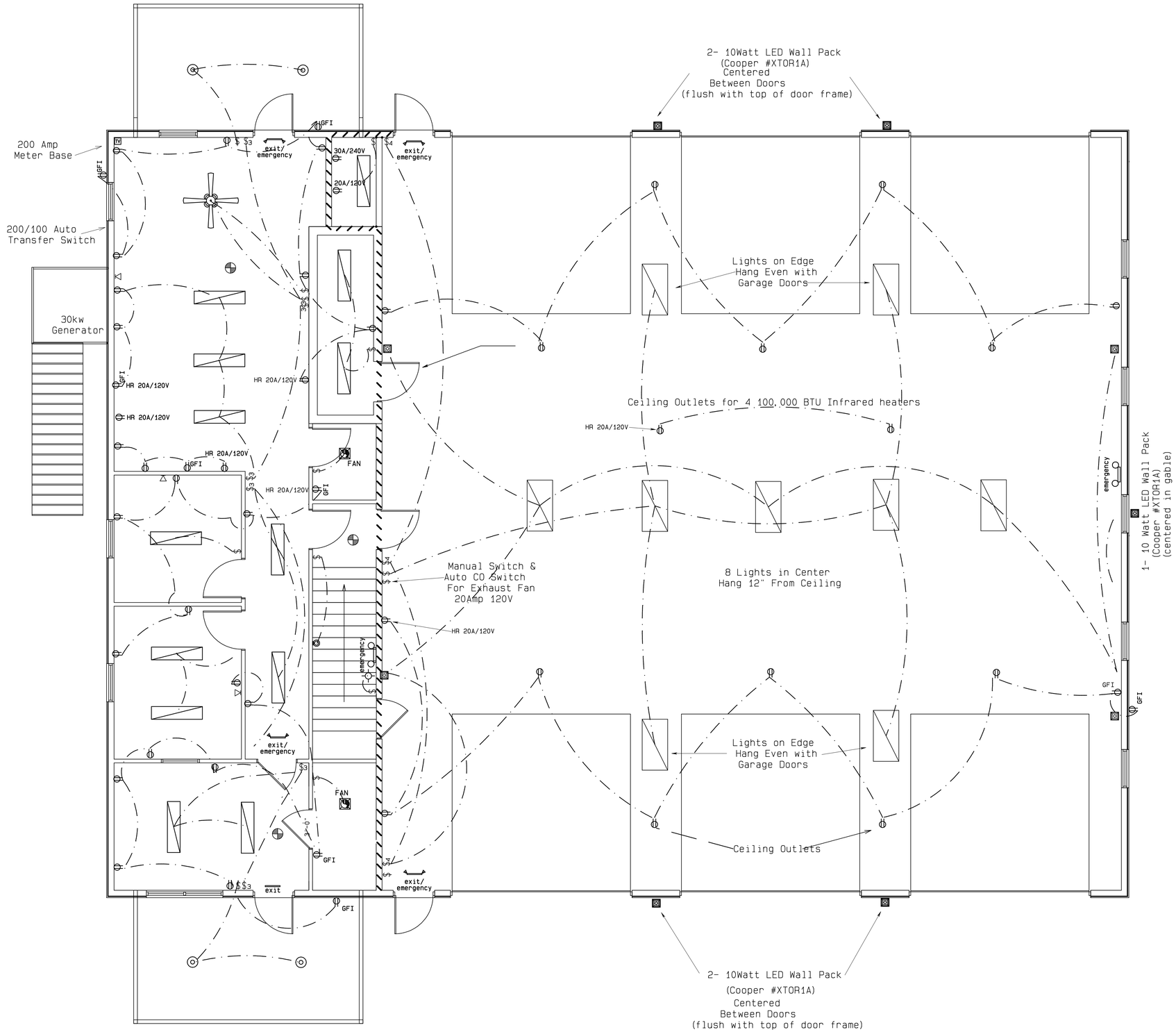

2 - 2 ton Duel Fuel Furnaces
(1- 20amp Circuit for Both)

2 - A/C's 240v/30Amp
See Contractor for Location

1 - 80 Gal. Electric Water Heater

1 - Microwave wired with Gas Range
120v/20Amp

1 - Frig & Dishwasher
120v/20Amp each

1 - Washer 120v/20Amp

1 - Dryer 240v/30Amp

1 - Exhaust Fan in Bay
240v/20Amp
See Print for Switch Specs

ELECTRICAL	SYMBOL	COUNT
Ceiling Fan/Light ($150)		1
Bath Fan/light 50CFM	FAN	2
6" Can and LED Trim		4
SB43212014RE (4' 4 bulb Wrap) or equivilent		13
StairWay Light ($50)		1
10 watt LED wall pack Cooper XTOR1A W/ photocell or equivilent		5
cable tv outlet (RG6)	TV	1
SB232120RE (4' 2 bulb Wrap) or equivilent		2
48" switched louvered exhaust fan		1
outlet 20 amp		46
smoke/carbon monoxide detector (typ) (1 ea. attic)		4
outlet gfi 20 amp	GFI	8
switch	$	16
switch 3 way	$3	11
switch 4 way	$4	1
2 Cat 5 Runs to each		3
IBH12L (Lithonia LED High Bay)		9

SCALE 1/4" = 1'-0"

DRAWN BY: LR/CD

DRAWING NO. 1

SHEET 11 OF 12

DRAWING TITLE
MAIN FLOOR ELECTRICAL

LUMPKIN COUNTY FIRE STATION 7
TOWN CREEK CHURCH ROAD
DAHLONEGA, GEORGIA 30533

DRW NAME: SLAB PLAN

DATE: August 15, 2014

REVISIONS

DATE	DESCRIPTION
9/22/14	REVISED BAY HEATER INFORMATION

Lumpkin County Engineering
25 Short Street, Suite 10
Dahlonega, Ga 30533
Office: 706-864-6894
Fax: 706-867-7272

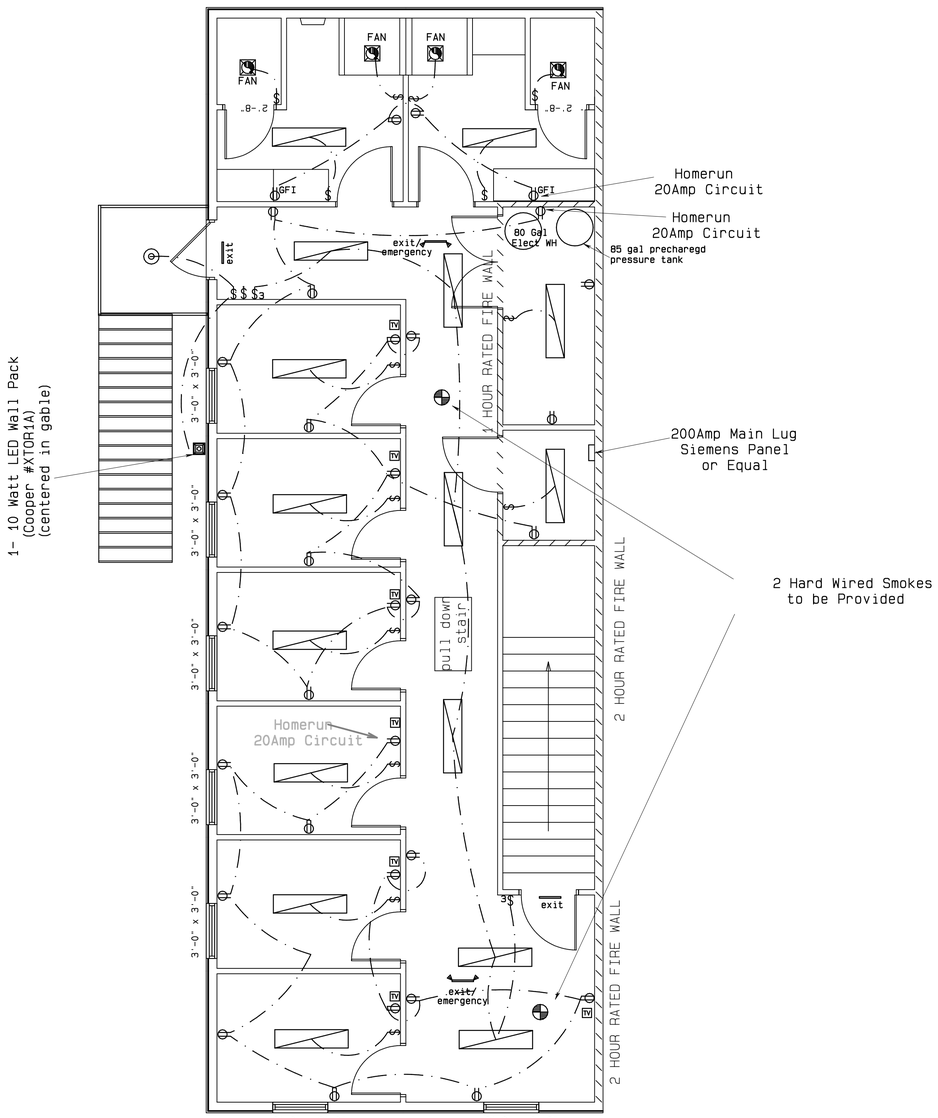

ELECTRICAL	SYMBOL	COUNT
Bath Fan/Light 50 CFM	FAN	4
6" Can & LED Trim		1
SB43212014RE (4' 4 bulb Wrap) or equal		16
Exterior Wall pack		1
lighted exit sign	exit	2
directional exit sign	exit	2
smoke/carbon monoxide detector (typ)		2
200A Main Lug Seimens Panel or Equal		1
cable tv outlet (RG6)	TV	7
20amp Receptacles		32
20amp GFI Receptacles	GFI	2
switch	$	14
switch 3 way	$3	3

SCALE 1/4" = 1'-0"

DRAWN BY: LR/CD

DRAWING NO. 1

SHEET 12 OF 12

DRAWING TITLE

SECOND FLOOR ELECTRICAL

LUMPKIN COUNTY FIRE STATION 7
TOWN CREEK CHURCH ROAD
DAHLONEGA, GEORGIA 30533

DRW NAME: SLAB PLAN

DATE: August 15, 2014

REVISIONS

DATE	DESCRIPTION

Lumpkin County Engineering
25 Short Street, Suite 10
Dahlonega, Ga 30533
Office: 706-864-6894
Fax: 706-867-7272