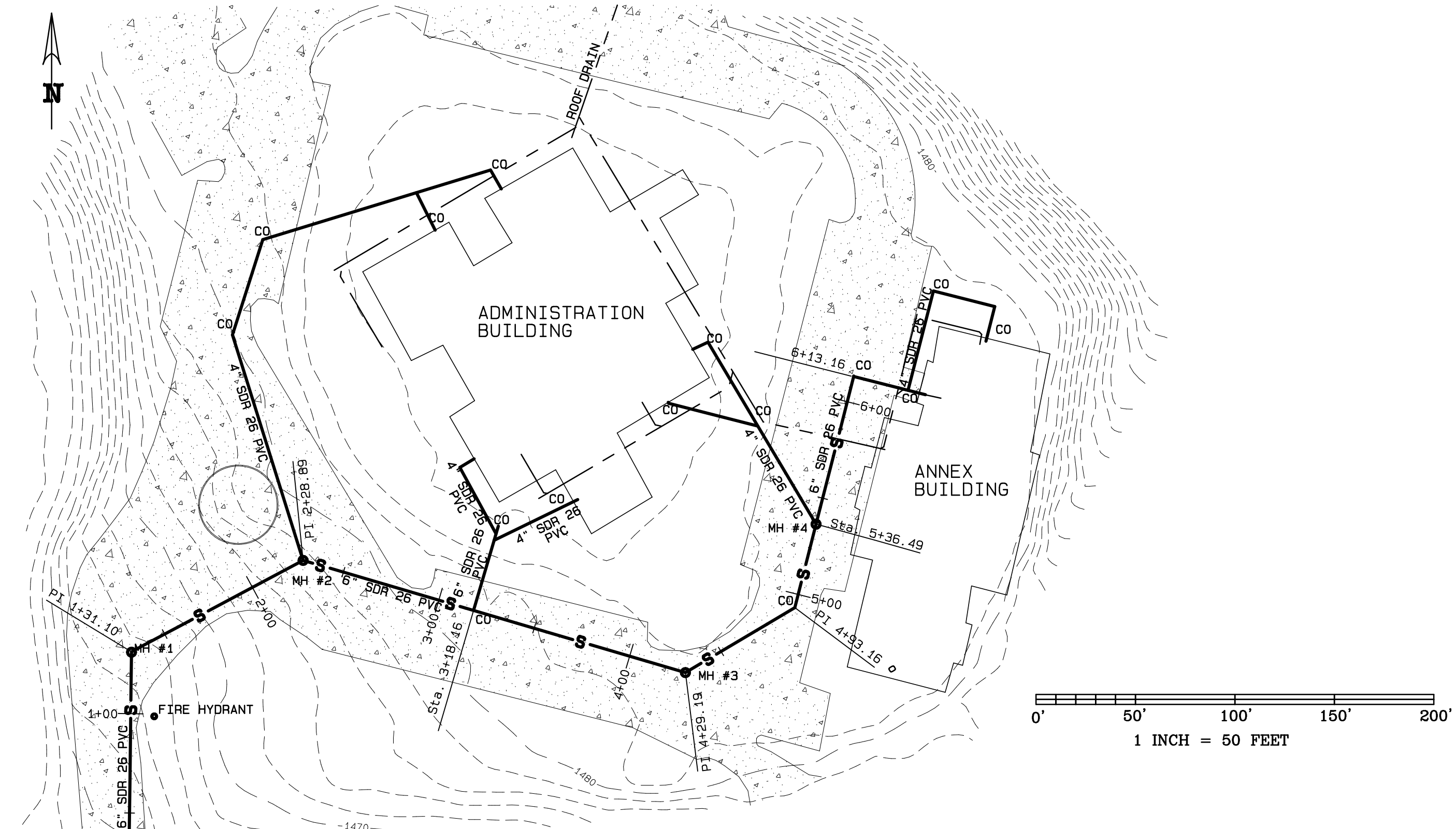

Scope of work:
The scope of work for this project is to replace existing sanitary sewer services for the Lumpkin County Administration Build and the Annex Building (existing service may be abandoned in place). All materials and locations will be as per plans. Slope on 6" pipe shall be as shown on plan. Slope on 4" pipe shall be a minimum of 0.5%. All pipe and fittings to be SDR 26 PVC. All asphalt to be saw cut to allow for a smooth joint when repaved. All crossing of sidewalks and curbs shall be accomplished without disturbing the existing concrete. All disturbed areas to be stabilized with as per the Manual for Erosion and Sediment Control in Georgia (Green Book). All asphalt cuts will be backfilled to the top of the asphalt with a minimum of 8" of GAB. Asphalt patching will not be included in the scope of this project. Contractor will be responsible for the location and protection of all existing utilities. Repair of any damage to existing utilities will be the responsibility of the contractor.

DATE: AUG 18, 2016
DRAWN BY: LR
FILE NAME: SEWER PLAN
SCALE: 1" = 50'
SHEET: 1 OF 2

SEWER PLAN FOR
LUMPKIN COUNTY ADMINISTRATION BUILDING
LUMPKIN COUNTY, GEORGIA

REVISIONS:

DATE:	DESCRIPTION
10-24-16	REVISED SEWER LINE, ADDED MANHOLE

Lumpkin Co Engineering
25 SHORT ST, SUITE 10
DALOHANGE, GEORGIA 30533
PHONE: (706) 864-6894

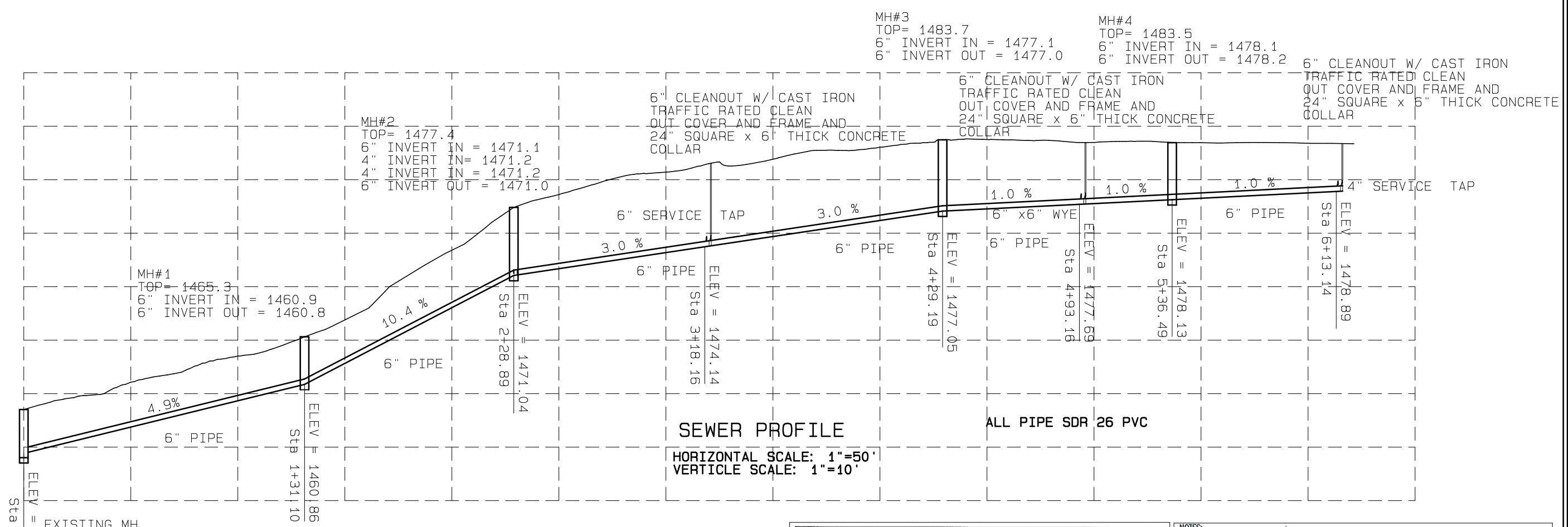

BEDDING TO BE CLASS B AS PER DETAIL.
REMAINING BACKFILL TO BE PLACED IN
6" LIFTS AND COMPACTED TO 95%
OF STANDARD PROCTOR

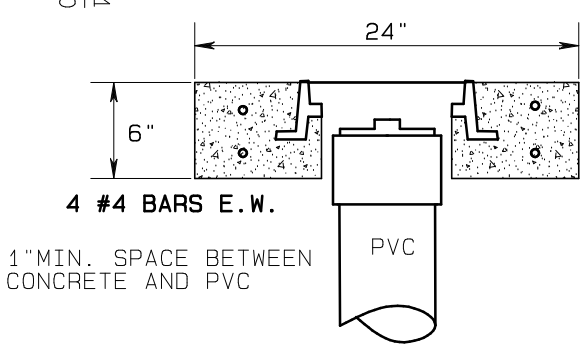

COLLAR DETAIL

NTS

NOTE:
#57 STONE INITIAL BACKFILL 6" ABOVE TOP OF PIPE FOR PVC GRAVITY SEWERS

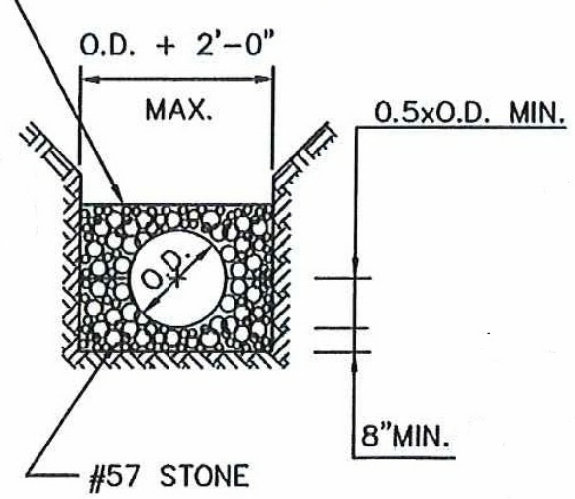

CLASS "B"

USE FOR SEWERS ONLY

CAPITOL FOUNDRY OF VA, INC.

2856 CRUSADER CIRCLE
VIRGINIA BEACH, VA 23453
PHONE: (757) 427-9431
FAX: (757) 427-9308
www.capitolfoundry.net

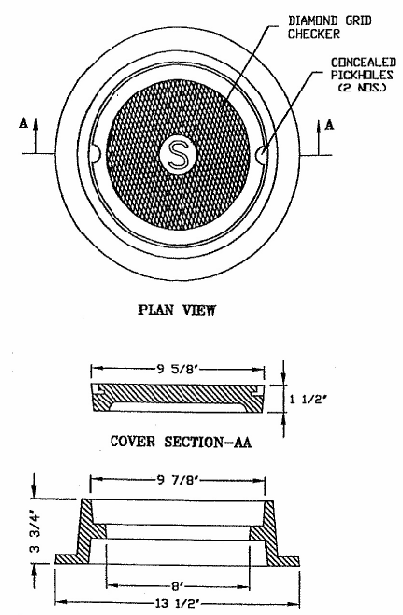

AVAILABLE MADE IN THE USA

REVERSIBLE 4" TALL TRAFFIC RATED CLEANOUT FRAME & COVER	
MATERIAL SPEC: ASTM A-48 CLASS 35B	ITEM #VB-7621*

NOTES:
1. MANHOLES TO BE FLUSH WITH PAVEMENT IN PAVED AREAS.
2. MANHOLES ON OUTFALL LINES ARE TO BE 18" ABOVE GROUND.
3. ALL MANHOLES ARE TO HAVE WATER-TIGHT MANHOLE FRAME AND COVERS.

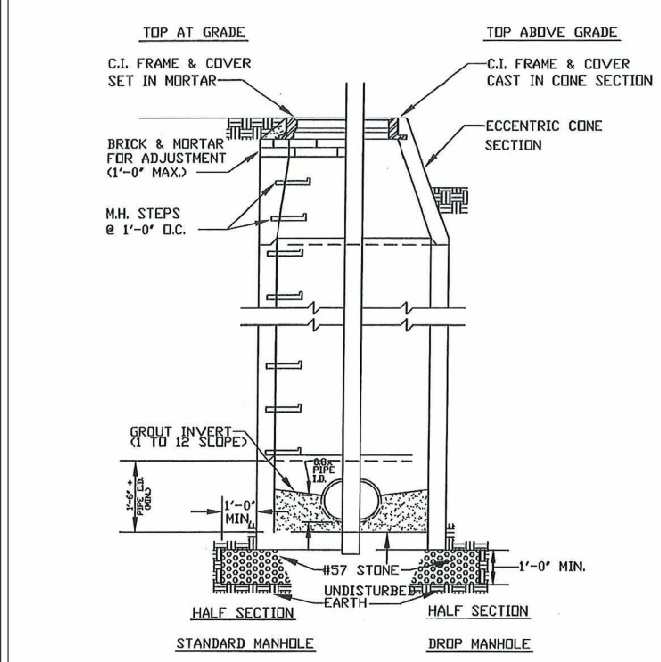

NOTE:
RUBBER BOOTS REQUIRED AT ALL PIPE CONNECTIONS TO MANHOLE WITH THE EXCEPTION OF DROP CONNECTIONS.

PRECAST CONCRETE MANHOLE

MANHOLE TO BE 4' DIA.

DATE: AUG 18, 2016
DRAWN BY: LR
FILE NAME: SEWER PLAN
SCALE: 1" = 50'
SHEET: 2 OF 2

PROFILE AND DETAILS FOR
LUMPKIN COUNTY ADMINISTRATION BUILDING
LUMPKIN COUNTY, GEORGIA

REVISIONS:

DATE:	DESCRIPTION
10-24-16	REVISED SEWER LINE, ADDED MANHOLE

Lumpkin Co Engineering
25 SHORT ST, SUITE 10
DALOHANGE, GEORGIA 30533
PHONE: (706) 864-6894