Project Manual

Specifications
Lumpkin County
Safety Improvements to
Various County Roads

Project# 2016-007-ITB LMIG-02-(187) Lump

<u>Modifications & Additions to the Specifications</u>

Project# 2016-007-ITB / LMIG-02-(187) Lump

Listed below are modifications and additions to the 2013 State of Georgia Standard Specifications for Construction of Transportation Systems.

Prompt Payment
Utility Conflicts
LMIG Projects - General
Construction Details (Resurfacing & Widening) (State)
Sec. 104- Scope of Work
Sec. 107 - Legal Regulations and Responsibility to the Public
Sec. 108- Prosecution and Progress (4) (failure or Delay in Completing Work on Time)
Sec. 109 – Measurement and Payment (2)
Sec. 150 – Traffic Control
Sec. 429-Rumble Strips
Sec. 636 Highway Signs
Sec. 647 Flashing Beacon
Sec. 652 - Painting Traffic Stripe

Special Provisions

Prompt Payment:

Prime Contractors, who sublet a portion of their work, shall pay their subcontractors for satisfactory performance of their contracts no later than 10 calendar days from receipt of each payment made to them.

Any delay or postponement of payment among the parties may take place only for good cause with prior written approval from the County.

If the contractor is found to be in noncompliance with these provisions, it shall constitute a breach of contract and further payments for any work performed may be withheld until corrective action is taken. If correction action is not taken, it may result in termination of the contract.

All subcontract agreements shall contain this requirement.

Utility Conflicts:

Utility companies having known facilities that conflict with the construction of this project will be directed by the County to adjust or relocate their facilities and will be notified of the contract award.

Conform to all the requirements of the Specifications as they relate to cooperation with utility owners and the protection of utility installations that exist on the project. Refer to the requirements of Section 107, Legal Regulations and Responsibility to the Public, with particular attention to Subsection 107.21.

Coordinate the work with any work to be performed by other in any right of way clearance and arrange a schedule of operations that will allow for completion of the Project within the specified contract time. Where stage construction is required, notify the utility worker when each stage of work is completed and the site is available for utility work to proceed.

Information concerning utility facilities known to exist within the project limits, including the list of owners, is available for reference.

Under Georgia Code Section 32-6-171, utilities are required to remove or relocate their facilities. The County is required to give the utility at least 60 days written notice directing the removal, relocation or adjustment and the utility owner is required to begin work within the time specified in the utility's work plan or revised work plan.

Upon request, copies of all agreements with utility companies having facilities on this project will be made available for examination by the Contractor at the Georgia D.O.T. District Office. Utility Adjustment Schedules, when submitted to the County by the utilities, will be made available to the Contractor after the Notice to Contractors has been posted by the Office of Construction Bidding Administration. The Utility Adjustment Schedules are available on the Office of Construction Bidding Administration's web site. Utility Adjustment Schedules may be included with the Utility Special Provision in the Contract Proposal on select projects. The Contractor is responsible for considering in its bid all existing and proposed utility locations and the removals, relocations, and adjustments specified in the Utility's Work Plan.

For this Project, Utility Owners that are required to remove, relocate, or adjust their facility to accommodate the construction of this Project may be liable to the Contractor for damages or delay costs resulting from the Utility Owner's failure to clear conflicts within the time specified in the approved Utility Work Plan. If the Utility Owner is unable to submit and obtain County approval of a revised Work Plan or fails to complete the removal, relocation, or adjustment of its facilities in accordance with the approved Work Plan, the Utility Owner may be liable to the County, or the Contractor, for damages or delay costs.

In accordance with Subsection 105.06 of the Specifications, the County is not liable for payment of any claims due to utility delays, inconvenience or damage sustained by the Contractor due to interference of any utilities or appurtenances, or the operation of moving them.

Whenever the Contractor considers that it is or will be entitled to damages or delay costs from the Utility Owner in accordance with O.C.G.A. 32-6-171, the Contractor shall provide written notice to the Utility Owner and the County within ten (10) days from the time of the dispute or potential dispute is identified. The Contractor shall follow the Procedures for Utility Damages or Delay Costs outlined in the latest edition of The Utility Accommodation Policy and Standards Manual. Failure to follow the above will result in waiver of the Contractor's claim against the Utility Owner for damages or delay costs.

In accordance with Subsection 107.2l.G delays by utilities will continue to be considered by the County in charging Contract Time. For purposes of applying provisions of this paragraph, railroads and the Metropolitan Atlanta Rapid Transit Authority (MARTA) are considered utilities.

LMIG Projects – General

The Contractor will be responsible for all necessary cleaning of the existing pavement including clipping of shoulders required prior to construction. Remove or spread the material displaced over the shoulders as directed by the Lumpkin County Public Works Department. Include the cost of this work in priced bid for other items.

Lumpkin County will not participate in the cost of any utility facility removal and relocations necessary in connection with the construction of this project.

Others will perform re-grading and grassing of shoulders after work is completed.

1. .

Other Work

The County reserves the right to perform, with its own forces, any maintenance or construction work as may be necessary on or near The Work covered by the Contract.

Enforcement

If the requirements of this Specification are not achieved, the Lumpkin County Public Works Department will cease all Work being performed and may withhold any monies due, or which may become due until the above requirements have been met.

SECTION 104 – SCOPE OF WORK

Delete Subsection 104.08 and Substitute the following:

104.08 Value Engineering Proposals

A. Applicability

This Section applies to those cost reduction proposals initiated and developed by the Contractor for changing the Plans, Specifications, or other requirements of the Contract. These provisions do not apply unless the proposal submitted by the Contractor is specifically identified as being presented as a Value Engineering Proposal (VEP) and the Contract amount is in excess of $50,000.

The cost-reduction Proposals contemplated are those discretionary changes which would require a Supplemental Agreement modifying the Contract and would produce a savings to the County by providing less costly items or methods than those specified in the Contract without impairing essential functions and characteristics including, but not limited to: service life, reliability, economy of operations, ease of maintenance, and safety, both during and after construction. Proposals must provide a product comparable to the original design at a lower cost or improved quality, or both. No proposals will be accepted that lower the quality of the project.

These provisions are applicable to the prime Contract and include all subcontracts.

B. Documentation

Value Engineering Proposals (VEP) will be processed in the same manner as prescribed for any other alterations of the Contract requiring a Supplemental Agreement.

As a minimum, the following information shall be submitted by the Contractor with each Value Engineering Proposal:

1. A description of the difference between the existing Contract requirement and the proposed change and the comparative advantages and disadvantages of each.
2. An itemization of the requirements of the Contract which must be changed and a recommendation of how to make such change (e.g., a suggested revision).
3. A detailed estimate of the cost of performing the work under the contract and under the proposed change.
4. A prediction of any effects the proposed changes would have on other costs to the County, including cost of related items and costs of maintenance and operation.
5. A statement of the time showing the last date by which an agreement for adoption of the proposed changes must be executed in order to obtain the maximum cost reduction during the remainder of the Contract, noting any effect on the Contract completion time or delivery schedule.
6. The dates of any previous or concurrent submissions of the Proposal, the Contract number(s) under which submitted, and the outcome or the result of the proposal in previous projects and any previous actions by the County, if known.
7. A life-cycle cost analysis.

NOTE: If a VEP is similar to a change in the Plans or Specifications for the Project that is under consideration by the County at the time said VEP is submitted, or if such VEP is based upon or similar to Standard Specifications, Special Provisions, or Standard Plans adopted by the County after the advertisement of the Contract, the Lumpkin County Public Works Department will not accept such proposal and the County reserves the right to make such changes without compensation to the Contractor under the provisions of this Section.

Proposed changes in the basic design of a pavement type (e.g., rigid to flexible or vice versa) or pavement thickness will not be considered as an acceptable VEP. Proposed changes to base/subbase courses may be considered as an acceptable VEP. If design alternates are shown in the plans, the County will not consider a VEP substituting a design alternate on which the Contractor could have bid for one on which the Contractor has bid. The County reserves the right to reject any VEP submitted requiring additional Right-of-Way.

C. Submission

Value Engineering Proposals submitted by the Contractor will be processed as expeditiously as possible; however, the County will not be liable for any delay in acting upon proposals submitted. The Contractor may withdraw, wholly or in part, any VEP not accepted by the County within the time specified in Subsection 104.08.B.5.

D. Acceptance

The decision of the Lumpkin County Public Works Department as to the acceptance or rejection of a VEP shall be final and shall not be subject to the provisions of Subsection 105.13, "Claims for Adjustments and Disputes."

The Lumpkin County Public Works Department may accept, in whole or in part, before work has been completed, any VEP submitted pursuant to this Subsection and not withdrawn by the Contractor by giving the Contractor written notice thereof reciting acceptance under this Subsection.

E. Notification

The Contractor will be notified in writing of the County's decision or rejection of each VEP submitted under these provisions. If a proposal is accepted, the necessary Contract modifications will be affected by execution of a Supplemental Agreement. Unless and until a VEP is affected by such Supplemental Agreement, the Contractor shall remain obligated to perform The Work in accordance with the terms of the existing Contract.

Supplemental Agreements made as a result of this Subsection will state that they are made pursuant to it.

F. Sharing

In the event a VEP submitted by the Contractor under this Subsection is accepted, the Supplemental Agreement effecting the necessary modifications will establish the net savings agreed upon and will provide for an adjustment in Contract Prices that will divide the net savings between the Contractor and the County in accordance with the following provisions:

1. Division of net savings in Contract Price Adjustment:
   - 50 percent of the net savings to the Contractor.
   - 50 percent of the net savings to the County.
2. The County reserves the right to include in the agreement any conditions it deems appropriate for consideration, approval, and implementation of the VEP. The Contractor's 50 percent of the net savings shall constitute the full compensation for effecting all changes pursuant to the agreement.

   Development costs incurred by the Contractor and review costs incurred by the County shall not be considered in computing the net savings of the VEP.

Restrictions and Disclosures: Upon acceptance and implementation of any VEP, any restrictions imposed by the Contractor on its use or disclosure of the information submitted shall be void.
The County shall thereafter have the right to use, duplicate, and disclose, in whole or in any part, all data necessary in theutilization of the proposal.

SECTION 107 – LEGAL REGULATIONS AND RESPONSIBILITY TO THE PUBLIC

Delete Subsection 107.23 and Substitute the following:

107.23 Environmental Considerations

A. Construction

Erosion control measures shall be installed, to the greatest practical extent, prior to clearing and grubbing. Particular care shall be exercised along stream buffers, wetlands, open waters and other sensitive areas to ensure that these areas are not adversely affected.

Construction equipment shall not cross streams, rivers, or other waterways except at temporary stream crossing structures approved by the Lumpkin County Public Works Department.

Construction activities within wetland areas are prohibited except for those within the construction limits as shown on the Plans and as specified in Subsection 107.23.E.

All sediment control devices (except sediment basins) installed on a project shall, as a minimum, be cleaned of sediment when one half the capacity, by height, depth or volume, has been reached. Sediment basins shall be cleaned of sediment when one-third the capacity by volume has been reached.

SECTION 108 – PROSECUTION AND PROGRESS

Delete the fifth paragraph from Subsection 108.01 and substitute the following:

No Subcontracts, or transfers of Contract, shall in any case release the Prime Contractor of his/her liability under the Contract and Bonds. No Subcontractor shall commence work in advance of the written approval of the Subcontract by the County. Except for certain items exempted by the governing authority of Lumpkin County, each Subcontractor shall be prequalified or registered with the Department of Transportation. Each Subcontract for a Registered Subcontractor shall not exceed $1,000,000.00 and Subcontracts for Prequalified Contractors shall not exceed their current capacity. Prequalified or Registered Subcontractors shall be qualified or registered with the Department in accordance with Chapter 672-5 of the Rules and Regulations Governing the Prequalification of Prospective Bidders adopted by the State Transportation Board.

SECTION 108 – PROSECUTION AND PROGRESS
(Contractor Performs 70% of Work)

Delete paragraphs one through four of Subsection 108.01 and substitute the following:

The Contractor shall not sublet, sell, transfer, assign, or otherwise dispose of the Contract or Contracts, or any portion thereof, or of his/her right, title, or interest therein, without written consent of the Lumpkin County Public Works Department. For Subcontracts, consent of the Lumpkin County Public Works Department will not be considered until after award of the Contract.

Incase such consent is given, the Contractor will be permitted to sublet a portion thereof, but shall perform, with his/her own organization, work amounting to not less than seventy percent (70%) of the total Contract cost, including materials, equipment, and labor.

As a further exception, any items designated as "Specialty Items" may be performed by Subcontract and the cost of any such Specialty Items so performed by Subcontract may be deducted from the total cost before computing the amount of work required to be performed by the Contractor with his/her own organization.

Purchase of materials by the Prime Contractor for use by a Subcontractor will not be allowed when computing the 70% requirement.

SECTION 108 – PROSECTION AND PROGRESS

Retain Subsection 108.03 except as modified below:

For this project, the Progress Schedule required by Subsection 108.03 need not be submitted.

Delete subsection 108.08 in its entirety and substitute the following:

108.08 Failure or Delay in Completing Work on Time

Time is an essential element of the Contract, and any delay in the prosecution of The Work may inconvenience the public, obstruct traffic, or interfere with business. In addition to the aforementioned inconveniences, any delay in completion of The Work will always increase the cost of engineering. For this reason, it is important that The Work be pressed vigorously to completion. Should the Contractor or, in case of default, the Surety fail to complete The Work within the time stipulated in the Contract or within such extra time that may be allowed, charges shall be assessed against any money due or that may become due the Contractor in accordance with the following schedule:

Schedule of Deductions for Each Day of Overrun in Contract Time		
Original Contract Amount		Daily Charges
From More Than	To and Including	Calendar Day, Completion Date or Available
$0	$500,000	$84
$500,00	$1,000,000	$151
$1,000,000	$2,000,000	$247
$2,000,000	$5,000,000	$391
$5,000,000	$10,000,000	$713
$10,000,000	$20,000,000	$1191
$20,000,000	$40,000,000	$1869
$40,000,000	—	$5089

For each Calendar Day or Available Day, as specified, that any work shall remain uncompleted after the contract time specified for the completion of the Work required by the Contract, the sum specified in the Contract will be deducted from any money due the Contractor, not as a penalty, but as liquidated damages; provided however, that due account shall be taken of any adjustment of the contract time for completion of the work granted under the provisions of Subsection 108.07.E.

The County may waive such portions of the liquidated damages as may accrue after the work is in condition for safe and convenient use by the traveling public.

A. Liquidated Damages

The amount of such charges is hereby agreed upon as fixed liquidated damages due the County after the expiration of the time for completion specified in the Contract. The Contractor and his Surety shall be liable for liquidated damages in excess of the amount due the Contractor on the final payment.

These fixed liquidated damages are not established as a penalty but are calculated and agreed upon in advance by the County and the Contractor due the uncertainty and impossibility of making a determination as to the actual and consequential damages which are incurred by the County as a result of the failure on the part of the Contractor to complete The Work on time.

1. Deduction from Partial Payments: Liquidated damages, as they accrue, will be deducted from periodic partial payments.
2. Deduction from Final Payment: The full amount of liquidated damages will be deducted from final payment to the Contractor and/or his Surety.
3. No Liquidated Damages Charged for Delay by the County: In case of default of the Contract and the subsequent completion of The Work by the County as hereinafter provided, the Contractor and his Surety shall be liable for the liquidated damages under the Contract, but no liquidated damages shall be chargeable for any delay in the final completion of The Work due to any unreasonable action, negligence, omission, or delay of the County. In any suit for the collection of or involving the assessment of liquidated damages, the reasonablenessof the amount shall be presumed. The liquidated damages referred to herein are intended to be and are cumulative and shall be in addition to every other remedy now or hereafter enforceable at law, in equity, by statute, or under the Contract.

B. No Waiver of Lumpkin County Rights

Permitting the Contractor to continue and finish The Work or any part of it after the expiration of the time allowed for completion or after any extension of time, shall not operate as a waiver of the rights of the County

under the Contract.

SECTION 109 – MEASUREMENT AND PAYMENT

109.1 Measurement and Quantities

The method of measurement and computations to be used in determination of quantities of material furnished and of work performed under the Contract will be those methods generally recognized as conforming to good engineering practice

109.2 Extra Work

Extra work, as defined in Subsection 101.27, when ordered in accordance with Subsection 104.04, will be authorized in writing by the Lumpkin County Public Works Department. The authorization will be in the form of a Supplemental Agreement or a Force Account.

A. Supplemental Agreement

In the case of a Supplemental Agreement, the work to be done will be stipulated and agreed upon by both parties prior to any extra work being performed.

Payment based on Supplemental Agreements shall constitute full payment and settlement of all additional costs and expenses including delay and impact damages caused by, arising from or associated with The Work performed.

B. Force Account

When no agreement is reached for Extra Work to be done at Lump Sum or Unit Prices, such work may be authorized by the Department to be done on a Force Account basis. A Force Account estimate that identifies all anticipated costs shall be prepared by the Contractor on forms provided by the Lumpkin County Public Works Department. Work shall not begin until the Force Account is approved. Payment for Force Account work will be in accordance with the following:

1. **Labor:** For all labor, equipment operators and supervisors, excluding superintendents, in direct charge of the specific operations, the Contractor shall receive the rate of wage agreed upon in writing before beginning work for each and every hour that said labor, equipment operators and supervisors are actually engaged in such work.

   The Contractor shall receive the actual costs paid to, or in behalf of, workers by reason of subsistence and travel allowances, health and welfare benefits, pension fund benefits, or other benefits, when such amounts are required by collective bargaining agreement or other employment contract generally applicable to the classes of labor employed on The Work.

   An amount equal to 15% of the sum of the above items will also be paid the Contractor.

2. **Bond, Insurance, and Tax**: For property damage, liability, and worker's compensation insurance premiums, unemployment insurance contributions, and Social Security taxes on the Force Account work, the Contractor shall receive the actual cost, to which cost no percentage will be added. The Contractor shall furnish satisfactory evidence of the rate or rates paid for such bond, insurance, and tax.
3. **Materials:** For materials accepted by the Lumpkin County Public Works Department and used, the Contractor shall receive the actual cost of such material incorporated into The Work, including Contractor paid transportation charges (exclusive of machinery rentals as hereinafter set forth), to which cost 10% will be added.
4. **Equipment:** For any machinery or special equipment (other than small tools) including fuel and lubricant, plus transportation costs, the use of which has been authorized by the Lumpkin County Public Works Department, the Contractor shall receive the rental rates indicated below for the actual time that such equipment is in operation on The Work or the time, as indicated below, the equipment is directed to stand

by.

Equipment rates shall be based on the latest edition of the *Rental Rate Blue Book for ConstructionEquipment* or *Rental Rate Blue Book for Older Construction Equipment,* whichever applies, as published by Equipment Watch using all instructions and adjustments contained therein and as modified below.

Allowable Equipment Rates shall be established as defined below:

- Allowable Hourly Equipment Rate= Monthly Rate/176 x Adjustment Factors.
- Allowable Hourly Operating Cost= Hourly Operating Cost.
- Allowable Rate per Hour= Allowable Hourly Equipment Rate + Allowable Hourly Operating Cost.
- Standby Rate= Allowable Hourly Equipment Rate x 35%

NOTE: The monthly rate is the basic machine plus any attachments.

Standby rates shall apply when equipment is not in operation and is directed by the Lumpkin County Public Works Department to standby for later use. In general, Standby rates shall apply when equipment is not in use, but will be needed again to complete The Work and the cost of moving the equipment will exceed the accumulated standby cost. Payment for standby time will not be made on any day the equipment operates for 8 or more hours. For equipment accumulating less than 8 hours operating time on any normal workday, standby payment will be limited to only that number of hours which, when added to the operating time for that day equals 8 hours. Standby payment will not be made on days that are not normally considered workdays.

The County will not approve any rates in excess of the rates as outlined above unless such excess rates are supported by an acceptable breakdown of cost.

Payable time periods will not include:

- Time elapsed while equipment is broken down
- Time spent in repairing equipment, or
- Time elapsed after the Lumpkin County Public Works Department has advised the Contractor the equipment is no longer needed

If a piece of equipment is needed which is not included in the above *Blue Book* rental rates, reasonable rates shall be · agreed upon in writing before the equipment is used. All equipment charges by persons or firms other than the Contractor shall be supported by invoices.

Transportation charges for each piece of equipment to and from the site of the Work will be paid provided:

- The equipment is obtained from the nearest approved source
- The return charges do not exceed the delivery charges
- Haul rates do not exceed the established rates of licensed haulers, and
- Such charges are restricted to those units of equipment not already available and not on or near the Project

No additional compensation will be made for equipment repair.

5. **Miscellaneous:** No additional allowance will be made for general superintendence, the use of small tools, or other costs for which no specific allowance is herein provided.

6. **Compensation:** The Contractor's representative and The Lumpkin County Public Works Department shall compare records and agree on the cost of work done as ordered on a Force Account basis at the end of each day on forms provided by the County.

7. **Subcontract Force Account Work:** For work performed by an approved Subcontractor or Second-tier Subcontractor, all provisions of this Section (109.05) that apply to the Prime Contractor in respect to labor, materials and equipment shall govern. The prime Contractor shall coordinate the work of his Subcontractor. The prime Contractor will be allowed an amount to cover administrative cost equal to 5% of the Subcontractor's amount earned but not to exceed $5,000.00 per Subcontractor. Markup for Second-tier Subcontract work will not be allowed.

   Should it become necessary for the Contractor or Subcontractor to hire a firm to perform a specialized type of work or service which the prime Contractor or Subcontractor is not qualified to perform, payment will be

made at reasonable invoice cost. To each invoice cost a markup to cover administrative cost equal to 5% of the total invoice but not to exceed $5,000.00 will be allowed the Contractor or Subcontractor but not both.

8. **Statements:** No payment will be made for work performed on a Force Account basis until the Contractor has furnished the Lumpkin County Public Works Department with duplicate itemized statements of the cost of such Force Account work detailed as follows:

   a. Name, classification, date, daily hours, total hours, rate, and extension for each laborer, equipment operator, and supervisor, excluding superintendents.
   b. Designation, dates, daily hours, total hours, rental rate, and extension for each unit of machinery and equipment.
   c. Quantities of materials, prices, and extensions.
   d. Transportation of materials.
   e. Cost of property damage, liability, and worker's compensation insurance premiums, unemployment insurance contributions, and Social Security tax.

   Statements shall be accompanied and supported by invoices for all materials used and transportation charges. However, if materials used on the Force Account work are not purchased specifically for such workbut are taken from the Contractor's stock, then, in lieu of the invoices, the Contractor shall furnish a n affidavit certifying that such materials were taken from his stock, that the quantity claimed was actually used, and that the price and transportation claimed represent the actual cost to the Contractor.

   Payment based on Force Account records shall constitute full payment and settlement of all additional costs and expenses including delay and impact damages caused by, arising from or associated with The Work performed.

109.3 Eliminated Items

Should any Items contained in the Proposal be found unnecessary for the proper completion of The Work, the Lumpkin County Public Works Department may, upon written order to the Contractor, eliminate such Items from the Contract, and such action shall in no way invalidate the Contract? When a Contractor is notified of the elimination of Items, he will be reimbursed for actual work done and all costs incurred, including mobilization of materials prior to said notifications.

109.4 Partial Payments

A. General

At the end of each calendar month, the total value of Items complete in place will be estimated by the Lumpkin County Public Works Department and certified for payment. Such estimate is approximate only and may not necessarily be based on detailed measurements. Value will be computed on the basis of Contract Item Unit Prices or on percentage of completion of Lump Sum I t e m s .

When so requested by the Contractor and approved by the Lumpkin County Public Works Department, Gross Earnings of $500,000.00 or more for work completed within the first 15 days of any month will be certified for payment on a semi-monthly basis subject to the conditions and provisions of Subsection 109.07.A, Subsection 109.07.B.6, Subsection 109.07.C, Subsection 109.07.D, Subsection 109.07.E, and Subsection1109.07.F.

B. Materials Allowance

Payments will be made on delivered costs, or percentage of bid price if otherwise noted, with copies of paid invoices provided to the County for the materials listed below which are to be incorporated into the Project provided the materials:

- Conform to all Specification requirements.
- Are stored on the Project Right-of-Way or, upon written request by the Contractor and written approval of the Lumpkin County Public Works Department, they may be stored off the Right-of-Way, but local to the Project, provided such storage is necessary due to lack of storage area on the Right-of-Way, need for security, or need for protection from weather.

As a further exception to on-Project storage, upon written request by the Contractor, the Lumpkin County Public

Works Department may approve off-the• Project storage items uniquely fabricated or precast for a specific Project, such as structural steel and precast concrete, which will be properly marked with the Project number and stored at the fabrication or precast facility.

The Lumpkin County Public Works Department may approve out-of-state storage for structural steel and prestressed concrete beams uniquely fabricated for a specific Project stored at the fabrication facility. .

1. Paid invoices should accompany the materials allowance request, but in no case be submitted to the Lumpkin County Public Works Department later than 30 calendar days following the date of the progress payment report on which the materials allowance was paid.

   Incase such paid invoices are not furnished within the established time; the materials allowance payment will be removed from the next progress statement and no further materials allowance will be made for that item on that Project.

2. Materials allowances will be paid for those items which are not readily available, and which can be easily identified and secured for a specific project and for which lengthy stockpiling periods would not be detrimental. Some exclusions are as follows:

   a. No payments will be made on living or perishable plant materials until planted.

   b. No payments will be made on Portland cement, Liquid Asphalt, or Grassing Materials.

   c. No payment will be made for aggregate stockpiled in a quarry. Payment for stockpiled aggregate will be made only if the aggregate is stockpiled on or in the immediate vicinity of the project and is held for the exclusive use on that project. The aggregate must be properly secured. If the aggregate stockpiled is to be paid for per-ton (mega gram) it must be reweighed on approved scales at the time it is incorporated into the Project.

   d. No payments will be made on minor material items, hardware, etc.

3. No materials allowance will be made for materials when it is anticipated that those materials will be incorporated into the Work within 30 calendar days. ·

4. No materials allowance will be made for a material when the requested allowance for such material is less than $50,000.

5. Where a storage area is used for more than one project, material for each project shall be segregated from material for other projects, identified, and secured. Adequate access for auditing shall be provided. All units shall be stored in a manner so that they are clearly visible for counting and/or inspection of the individual units.

6. The County Manager may, at his discretion, grant waiver to the requirements of this· Section when, in his opinion, such waiver would be in the public i n t e r e s t .

   Subsequently, in the event the material is not on-hand and in the quantities for which the materials allowance was granted, the materials allowance payment will be removed from the next progress statement and no further materials allowance will be made for those items on that Project. If sufficient earnings are not available on the next progress statement, the Contractor agrees to allow the County to recover the monies from any other Contract he may have with the County, or to otherwise reimburse the County.

   Payments for materials on hand shall not exceed the invoice price or 75 percent of the bid prices for the pay items into which the materials are to be incorporated, whichever is l e s s .

C. Minimum Payment

No partial payment will be made unless the amount of payment is at least $1000.00.

D. Liquidated Damages

Accrued liquidated damages will be deducted in accordance with Subsection 108.08.

E. Other Deductions

In addition to the deductions provided for above, the County has the right to withhold any payments due the Contractor for items unpaid by the Contractor for which the County is directly responsible, including, but not limited to, royalties (see Section 106).

F. Amount of Payment

The balance remaining after all deductions provided for herein have been made will be paid to the Contractor. Partial estimates are approximate and are subject to correction on subsequent progress statements. If sufficient earnings are not available on the subsequent progress statement, the Contractor agrees to allow the County to recover the monies from any other Contract he may have with the County, or to otherwise reimburse the County. The Lumpkin County Public Works Department is responsible for computing the amounts of all deductions herein specified, for determining the progress of the Work and for the items and amounts due to the Contractor during the progress of the Work and for the final statement when all Work has been completed.

G. Interest

Under no circumstances will any interest accrue or be payable on any sums withheld or deducted by the Department as authorized by Subsection 109.07.A, Subsection 109.07.B.6. Subsection 109.07.C, Subsection 109.07.D. Subsection 109.07.E, and Subsection 109.07.F.

H. Insert the Following in Each Subcontract

The Contractor shall insert the following in each Subcontract entered into for work under this Contract:

"The Contractor shall not withhold any retainage on Subcontractors. The Contractor shall pay the Subcontractor 100% percent of the gross value of the Completed Work by the Subcontractor as indicated by the current estimate certified by the Lumpkin County Public Works Department for payment."

Neither the inclusion of this Specification in the Contract between the County and the Prime Contractor nor the inclusion of the provisions of this Specification in any Contract between the Prime Contractor and any of his. Subcontractors nor any other Specification or Provision in the Contract between the County and the Prime Contractor shall create, or be deemed to create, any relationship, contractual or otherwise, between the County and any Subcontractor.

109.5 Final Payment

When Final Inspection and Final Acceptance have been made by the Lumpkin County Public Works Department, final payment will be made. Final Payment will be for all work placed and completed in a satisfactory manner minus any previous payments.

A. Termination of County's Liability

Final payment will be in the amount determined by the statement as due and unpaid. The acceptance of the final payment shall operate as and be a release to the County from all claims of liability under this contract and for any act or neglect of the County.

109.6 Termination Clause

A. General

The County may, by written notice, terminate the Contract or a portion thereof for the County's convenience when the County determines that the termination is in their best interest, or when the Contractor is prevented from proceeding with the Contract as a direct result of one of the following conditions:

1. An Executive Order of the President of the United States with respect to the prosecution of war or in the interest of national defense.
2. The Lumpkin County Public Works Department and Contractor each make a determination, that, due to a shortage of critical materials required to complete the Work which is caused by allocation of these materials to work of a higher priority by the Federal Government or any agency thereof, it will be impossible to obtain these materials within a practical time limit and that it would be in the public interest to discontinue construction.
3. An injunction is imposed by a court of competent jurisdiction which stops the Contractor from proceeding with the Work and causes a delay of such duration that it is in the public interest to terminate the Contract and the Contractor was not at fault in creating the condition which led to the court's injunction.

   The decision of the Lumpkin County Public Works Department as to what is in the public interest and as to the Contractor's fault, for the purpose of Termination, shall be final.
4. Orders from duly constituted authority relating to energy conservation.

B. Implementation

When, under any of the conditions set out in Subsection A of this Section, the Contract, or any portion thereof, is terminated before completion of all Items of Work in the Contract, the Contractor shall be eligible to receive some or all of the following items of payment:

1. For the actual number of units of items of Work completed, payment will be made at the Contract Unit Price.
2. Reimbursement for organization of the Work and moving equipment to and from the job will be considered where the volume of work completed is too small to compensate the Contractor for these expenses under the Contract Unit Prices. However, the Engineer's decision as whether or not to reimburse for organization of the Work and moving equipment to and from the job, and in what amount, shall be final.
3. Acceptable materials, obtained by the Contractor for the Work, that have been inspected, tested, and accepted by the Lumpkin County Public Works Department, and that are not incorporated in the Work will, at the request of the Contractor, be purchased from the Contractor at actual cost as shown by receipted bills and actual cost records at such points of delivery as may be designated by the Lumpkin County Public Works Department. This will include any materials that have been delivered to the project site or that have been specifically fabricated for the project and are not readily usable on other projects. It will not include materials that may have been ordered, but not delivered to the project site and that are readily usable on other projects (e.g., guard rail, stone, lumber, etc.).
4. For Items of Work-partially completed; payment adjustments including payments to afford the Contractor a reasonable profit on work performed, may be made as determined by the Lumpkin County Public Works Department based upon a consideration of costs actually incurred by the Contractor in attempting to perform the Contract.
5. No payment will be made, and the County will have no liability, for lost profits on Work not performed. In particular, the County will not be liable to the Contractor for all profits the Contractor expected to realize had the Project been completed, nor for any loss of business opportunities, nor for any other consequential damages.
6. In order that the County may make a determination of what sums are payable hereunder, the Contractor

agrees that, upon termination of the Contract, it will make all of its books and records available for inspection and auditing by the County.

To be eligible for payment, costs must have been actually incurred, .and must have been recorded and accounted for according to generally accepted accounting principles, and must be items properly payable under County policies. Where actual equipment costs cannot be established by the auditors, payment for unreimbursed equipment costs will be made in the same manner as is provided in Subsection 109.05 for Force Account Work. Idle time for equipment shall be reimbursed at standby 'rates. In no case will the Contractor be reimbursed for idle equipment after the Lumpkin County Public Works Department has advised the Contractor the equipment is no longer needed on the job. Refusal of the Contractor to allow the County to inspect and audit all of the Contractor's books and records shall conclusively establish that the County has no liability to the Contractor for any payment under this provision, and shall constitute a waiver by the Contractor of any claim for damages allegedly caused by breach or termination of the Contract. The amount payable under this provision, if any, is to be determined by the Lumpkin County Public Works Department, whose determination will be final and binding.

7. The sums payable under this Subsection shall be the Contractor's sole and exclusive remedy for termination of the Contract.

C. Termination of a Contract

Termination of a Contract or a portion thereof shall not relieve the Contractor of his responsibilities for any completed portion of the Work, nor shall it relieve his Surety of its obligation for and concerning any just claims arising out of the Work performed.

109.7 Interest

In the event any lawsuit is filed against the County alleging the Contractor is due additional money because of claims or for any breach of contract, the Contractor hereby waives and renounces any right it may have under O.C.G.A. Section 13-6-13 to prejudgment interest. Also, the Contractor agrees that notwithstanding any provision or provisions of Chapter 11 of Title 13 of the Official Code of Georgia that the provisions of this contract control as to when and how the Contractor shall be paid for The Work. Further, the Contractor waives and renounces any and all rights it may have under Chapter 11 of Title 13 of the Official Code of Georgia.

SECTION 109 – MEASUREMENT & PAYMENT (LMIG Projects)

Delete the first sentence of Subsection 109.07.A, paragraph one, and substitute the following:

A. General: 'On the tenth day of each calendar month, the total value of Items complete in place will be estimated by the Lumpkin County Public Works Department and certified for payment.

SECTION 149 – CONSTRUCTION LAYOUT

Retain Section 149 except as modified below:

Construction layout will be the responsibility of the contractor...

SECTION 150 – TRAFFIC CONTROL

150.1 GENERAL

This section as supplemented by the Plans, Specifications, and Manual on Uniform traffic Control Devices (MUTCD) shall be considered the Temporary Traffic Control (TIC) Plan. Activities shall consist of furnishing, installing, maintaining, and removing ·necessary traffic signs, pedestrian signs, barricades, lights, signals, cones, pavement markings and other traffic control devices and shall include flagging and other means for guidance and protection of vehicular and pedestrian traffic through the Work Zone. This Work shall include both maintaining existing devices and installing additional devices as necessary in construction work zones.

When any provisions of this Specification or the Plans do not meet the minimum requirements of the MUTCD, the MUTCD shall control. The 2013 Edition of the MUTCD shall be in effect for the duration of the project.

The needs and control of all road users (motorists, bicyclists and pedestrians within the highway right-of-way and easements, including persons with disabilities in accordance with the Americans with Disabilities Act of 1990 (ADA),Title II,Paragraph 35.130) through a Temporary Traffic Control (TIC) zone shall be an essential part of highway construction, utility work, maintenance operations and management of traffic incidents.

The Worksite Traffic Control Supervisor (WTCS) shall have a copy of Part VI of the MUTCD and the Contract on the job site. Copies of the current MUTCD may be obtained from the FHWA web page at http://mutcd.fhwa.dot.gov.

A. WORKER SAFETY APPAREL

All workers, including emergency responders, within the right-of-way who are exposed either to traffic (vehicles using the highway for purpose of travel) or to work vehicles and construction equipment within the TIC zone shall wear high-visibility safety apparel that meets the Performance Class 2 or 3 requirements of the ANSI/ISEA 107-2004 publication entitled "American National Standard for High-Visibility Safety Apparel and Headwear", or equivalent revisions, and labeled as meeting the ANSI107-2004 standard performance for Class 2 or 3 risk exposure. Emergency and incident responders and law enforcement personnel within the TIC zone may wear high-visibility safety apparel that meets the performance requirements of the ANSI/ISEA 207-2006 publication entitled "American National Standard for High-Visibility Public Safety Vests", or equivalent revisions, and labeled as ANSI207-2006, in lieu of ANSI/ISEA 107-2004 apparel. Firefighters or other

emergency responders working within the right-of-way and engaged in emergency operations that directly expose them to flame, fire, heat, and/or hazardous material may wear retroreflective turn-out gear that is specified and regulated by other organizations, such as the National Fire Protection Association.

B. WORKSITE TRAFFIC CONTROL SUPERVISOR

ALL HIGHWAYS (ADDITIONAL REQUIREMENTS BELOW FOR · INTERSTATES): The Contractor shall designate a qualified individual as the Worksite Traffic Control Supervisor (WTCS) who shall be responsible for selecting, installing and maintaining all traffic control devices in accordance with the Plans, Specifications, Special Provisions and the MUTCD. A written resume documenting the experience and credentials of the WTCS shall be submitted and accepted by the Lumpkin County Public Works Department prior to beginning any work that involves traffic control. The WTCS shall be available on a twenty-four (24) hour basis to perform his duties. If the work requires traffic control activities to be performed during the daylight and nighttime hours it may be necessary for the Contractor to designate an alternate WTCS. An alternate WTCS must meet the same requirements and qualifications as the primary WTCS and be accepted by the Lumpkin County Public Works Department prior to

Beginning any traffic control duties. The Worksite Traffic Control Supervisor's traffic control responsibilities shall have priority over all other assigned duties.

As the representative of the Contractor, the WTCS shall have full authority to act on behalf of the Contractor in administering the TTC Plan. The WTCS shall have appropriate training in safe traffic control practices in accordance with Part VI of the MUTCD. In addition to the WTCS all other individuals making decisions regarding traffic control shall meet the training requirements of the Part VI of the MUTCD.
The WTCS shall supervise the initial installation of traffic control devices. The Lumpkin County Public Works Department prior to the beginning of construction will review the initial installation. Modifications to traffic control devices as required by sequence of operations or staged construction shall be reviewed by the WTCS.

The WTCS shall be available on a full-time basis to maintain traffic control devices with access to all personnel, materials, and equipment necessary to respond effectively to an emergency situation within forty-five (45) minutes of notification of the emergency.

The WTCS shall regularly perform inspections to ensure that traffic control is maintained. Unless modified by the special conditions or by the Lumpkin County Public Works Department, routine deficiencies shall be corrected within a twenty-four (24) hour period. Failure to comply with these provisions shall be grounds for dismissal from the duties of WTCS and/or removal of the WTCS from the project. Failure of the WTCS to execute his duties shall be considered as non-• performance under Subsection 150.08.

The Lumpkin County Public Works Department will periodically review the work for compliance with the requirements of the TTCplan.

On projects where traffic control duties will not require full time supervision, the Lumpkin County Public Works Department may allow the Contractor's Project Superintendent to serve as the WTCS as long as satisfactory results are obtained.

C. TRAFFIC CONTROL DEVICES

All traffic control devices used during the construction of a project shall meet the Standards utilized in the MUTCD, and shall comply with the requirements of these Specifications, Project Plans, and Special Provisions. All devices shall be tested at NCHRP Test Level III. Reference is made to Subsections 104.05, 107.07, and 107.09.

D. REFLECTORIZATION REQUIREMENTS

All rigid fluorescent orange construction warning signs (black on fluorescent orange) shall meet the reflectorization and color requirements of ASTM Type VII, VIII,IX or X regardless of the mounting height.

Portable signs which have flexible sign blanks shall meet the reflectorization and color requirements of ASTM Type VI.

Warning signs (W3-1a) for stop conditions that have rumble strips located in the travel way shall be reflectorized with ASTM Type IX fluorescent yellow sheeting.

All other signs shall meet the requirements of ASTM Type III or IV except for "Pass With Care" and "Do Not Pass" signs which may be ASTM Type 1 unless otherwise specified.

CHANNELIZATION DEVICES: Channelization devices shall meet the requirements of ASTM Type III or IV high intensity sheeting.

E. IMPLEMENTATION REQUIREMENTS

No work shall be started on any project phase until the appropriate traffic control devices have been placed in accordance with the Project requirements. Changes to traffic flow shall not commence unless all labor, materials, and equipment necessary to make the changes are available on the Project.

When any shift or change is made to the location of traffic or to the flow patterns of traffic, including pedestrian traffic, the permanent safety features shall be installed and fully operational before making the change. If staging or site conditions prevent the installation of permanent features then the equivalent interim devices shall be utilized. This work shall also include any necessary removal and reinstallation of guardrail panels to achieve the required panel lap to accommodate the appropriate shift and traffic flow including the final traffic flow configuration (The cost of performing this work shall be included in Traffic Control-Lump Sum).

Any section of the work that is on new location shall have all permanent safety features installed and fully operational before the work is opened to traffic. Safety features shall include but are not limited to the following i t e m s :

1. Guardrail including anchors and delineation with properly lapped panels
2. Impact attenuators
3. Traffic signals
4. Warning devices
5. Pavement markings including words, symbols, stop bars, and crosswalks
6. Roadway signs including regulatory, warning, and guide

Outdoor lighting shall be considered as a safety feature for welcome centers, rest areas, and weigh station projects. For typical roadway type projects new street lighting is not considered a safety feature unless specifically noted in the plans or in the special conditions.

F. MAINTENANCE OF TRAFFIC CONTROL DEVICES

Traffic control devices shall be in acceptable condition when first erected on the project and shall be maintained in accordance with Subsection 104.05 throughout the construction period. All unacceptable traffic control devices shall be replaced within 24 hours. When not in use, all traffic control devices shall be removed, placed or covered so as not to be visible to traffic. All construction warning signs shall be removed within seven calendar days after time charges are stopped or pay items are complete. If traffic control devices are left in place for more than ten days after completion of the Work, the County shall have the right to remove such devices, claim possession thereof, and deduct the cost of such removal from any monies due, or which may become due, the Contractor.

G. TRAFFIC INTERRUPTION RESTRICTIONS

The County reserves the right to restrict construction operations when, in the opinion of the Lumpkin County Public Works Department, the continuance of the Work would seriously hinder traffic flow, be needlessly disruptive or unnecessarily inconvenience the traveling public. The Contractor shall suspend and/or reschedule any work when the Lumpkin County Public Works Department deems that conditions are unfavorable for continuing the Work.

Advanced notification requirements to the Contractor to suspend work will be according to the events and the time restrictions outlined below:

Incident management	No advanced notice required
Threatening/Inclement weather	24 hours
Holidays sporting events, unfavorable conditions	Three (3) calendar days

If the work is suspended, the Contractor may submit a request for additional contract time as allowed under Section 108. The County will review the request and may grant additional contract time as justified by the impact to the Contractor's schedule. Compensation for loss of productivity, rescheduling of crews, and rental of equipment or delays to the Contractor's schedule will not be considered for payment. Additional contract time will be the only consideration granted to the Contractor.

150.2 TEMPORARY TRAFFIC CONTROL (TTC) ZONES:

A. DEVICES AND MATERIALS:

In addition to the other provisions contained herein, work zone traffic control shall be accomplished using the following means and materials:

1. **Portable Advance Warning Signs**
   Portable advance warning signs shall be utilized as per the requirements of the temporary traffic control plans. All signs shall meet the requirements of the MUTCD and shall be NCHRP 350 crashworthy compliant.
2. **Arrow Panels**
   Portable sequential or flashing arrow panels as shown in the Plans or Specifications for use on Interstate or multi-lane highway lane closure only, shall be a minimum size of 48" high by 96" wide with not less than 15 lamps used for the arrow. The arrow shall occupy virtually the entire size of the arrow panel and shall have a minimum legibility distance of one mile. The minimum legibility distance is that distance at which the arrow panel can be comprehended by an observer on a sunny day, or clear night. Arrow panels shall be equipped with automatic dimming features for use during hours of darkness. The arrow panels shall also meet the requirements for a Type C panel as shown in the MUTCD. The sequential or flashing arrow panels shall not be used for lane closure on two-lane, two-way highways when traffic is restricted to one-lane operations in which case, appropriate signing, flaggers and when required, pilot vehicles will be deemed sufficient.

   The sequential or flashing arrow panels shall be placed on the shoulder at or near the point where the lane closing transition begins. The panels shall be mounted on a vehicle, trailer, or other suitable support. Vehicle mounted panels shall be provided with remote controls. Minimum mounting height shall be seven feet above the roadway to the bottom of the panel, except on vehicle mounted panels which should be as high as practical.

   For emergency situations, arrow display panels that meet the MUTCD requirements for Type A or Type B panels may be used until Type C panels can be located and placed at the site. The use of Type A and Type B panels shall be held to the minimum length of time possible before having the Type C panel(s) in operation. The Lumpkin County Public Works Department shall determine when conditions and circumstances are considered to be emergencies. The Contractor shall notify the Lumpkin County Public Works Department, in writing, when any non-specification arrow display panel(s) is being used in the work.

3. **Portable Changeable Message Signs**
   Portable changeable message signs meeting the requirements of Section 632 and the MUTCD. Any PCMS in use that is not protected by positive barrier protection shall be delineated by a minimum of three drums that meet the requirement of Section 150.05.A.1. The drum spacing shall not exceed a maximum of ten (10') feet as shown in Detail150-PCMS. When the PCMS is within twenty (20') feet of the opposing traffic flow, the trailing end of the PCMS shall be

delineated with a minimum of three drums spaced in the same manner as the approach side of the PCMS.

4. RUMBLE STRIPS

Rumble strips incorporated into the work shall meet the requirements of Section 429 and the MUTCD. Existing rumble strips that are positioned in the traveled way to warn traffic of a stop condition shall be reinstalled based on the following requirements: Thermoplastic Reflectorized pavement marking compound in accordance to section 653 may be used in lieu of asphalt concrete. The use of thermoplastic shall be approved by Lumpkin County.

INTERMEDIATE SURFACES: Intermediate surfaces that will be in use for more than forty-five (45) calendar days shall have rumble strips reinstalled on the traveled way in the area of a stop condition. Non-refundable deductions in accordance with 150.08 will be assessed for any intermediate surface in place for greater than 45 days without rumble strips.

FINAL SURFACES: Rumble strips shall be installed on the final surface within fourteen (14) calendar days of the placement of the final surface in the area of the stop condition. Failure to install within fourteen (14) Calendar days will result in assessment of non-refundable deductions in accordance with 150.08.

Prior to the removal of any rumble strips located in the travel-way, stop ahead (W3-1a) warning signs shall be double indicated ahead of the stop condition. These warning signs shall be a minimum of 48 inches by 48 inches. The reflectorization of the warning signs shall be as required by Subsection 150.0l.C. These warning signs shall remain in place until the rumble strips have been reinstalled on the traveled way. Any existing warning signs for the stop ahead condition shall be removed or covered while the 48" X 48" (W3- 1a) signs are in place. When the rumble strips have been reinstalled these warning signs should be promptly removed and any existing signage placed back in service.

11. **STOP SIGN REGULATED INTERSECTIONS:** For intersections that utilize stop sign(s) to control the flow of traffic and to restrict the movement of vehicles, the stop sign(s) shall be maintained for the duration of the work or until such time that the stop condition is eliminated or until an interim or permanent traffic signal can be installed to provide proper traffic control. The traffic signal shall be installed and properly functioning before the removal of the existing stop sign(s) is permitted. If the existing intersection is enhanced traffic control features such as stop bars, double indicated stop signs, oversized signs, advanced warning stop ahead signs, rumble strips on the approaches or flashing beacons located overhead or on the shoulders then these features shall be maintained for the duration of the project or until the permanent traffic control plan has been implemented.

Whenever the staging of the work requires that the traveled-way be relocated or realigned the Contractor shall reinstall all enhanced traffic control features noted above on the newly constructed· sections of the work. The cost of relocating the stop bars, stop signs, advanced warning signs, the rumble strips and the flashing beacons shall be included in the -price bid for Lump-Sum-Traffic Control unless individual pay items are included in the contract for rumble strips and/or flashing beacons. When pay items are included in the contract for rumble strips or flashing beacons then these items will be paid per each.

When staging requires the relocation or realignment of an existing stop condition it may be necessary to consider the addition of enhanced traffic control features even though none existed at the original location. Horizontal and vertical alignment changes at a new location may have decreased or restricted sight distance or the stop condition may occur sooner than in the previous alignment. If these conditions occur then the Lumpkin County Public Works Department and/or the WTCS should consider additional measures to enhance the motorist's awareness of the changes even though the staging plans may not address enhanced features. Stop signs should be a minimum of 36 inches for interim situations. The use of 48 inch stop signs may be warranted under project specific conditions. Flags may be used on interim/permanent stop signs that are mounted at seven (7') feet in height for a short duration in order to direct additional attention to a new or relocated stop sign(s). Flags should not be used for durations exceeding two weeks unless unusual or site specify conditions warrant a longer period of time. The use of Type "A" flashing red light(s) attached to the stop sign(s) may be appropriate during the same period that the flags are in use to increase attention.

The use of rumble strips and/or portable changeable message signs may be considered. The use of new rumble strips, where none previously existed, shall have the prior approval of District Traffic Operations before being included as part of the temporary traffic control plan. The message(s) displayed on any PCMS shall have the prior approval of the Lumpkin County Public Works Department and the message(s) shall be included as part of the TIC plan for the interim staging.

The placement of any additional interim ground-mounted signs and posts or stop bars shall be considered as incidental to the price bid for Lump Sum-Traffic Control. The installation of rumble strips, flashing beacons or the use of Portable Changeable Message Signs (PCMS) shall be considered as Extra Work unless pay items are included in the contract.

B. WORK ZONE RESTRICTIONS:

1. Interstate

The Contractor shall not simultaneously perform work on both the inside shoulder and outside shoulder on either direction of traffic flow when the Work is within 12 feet of the travel-way, unless such areas are separated by at least one-half mile of distance.

2. Non-Interstate Divided Highways

The Contractor shall not simultaneously perform work on both the inside shoulder and outside shoulder on either direction of traffic flow when the Work is within 12 feet of the travel-way, unless such areas are separated

by at least one-half mile distance in rural areas or at least 500 feet of distance in urban areas.

3. Non-Divided Highways

a. The Contractor shall not simultaneously perform work on opposite sides of the roadway when the work is within 12 feet of the travel-way, unless such areas are separated by at least one-half mile of distance in rural areas or at least 500 feet of distance in urban areas.

b. On two-lane projects where full width sections of the existing subgrade, base or surfacing are to beremoved, and new base, subgrade, or surfacing are to be constructed, the Contractor shall maintain one- lane traffic through the construction area by removing and replacing the undesirable material for half the width of the existing roadway at a time. Replacement shall be made such that paving is completed to the level of the existing 'pavement in the adjacent lane by the end of the workday or before opening all the roadway to traffic.

4. All Highways:

a. There shall be no reduction in the total number of available traffic lanes that existed prior to construction except as specifically allowed by the Contract and as approved by the Lumpkin County Public Works Department.

b. Travel-way Clearances: All portions of the work shall maintain the following minimum requirements:

Horizontal: The combined dimensions of the paved shoulder and the roadway surface remaining outside the Work Zone shall be no less than sixteen (16) feet in width at any location.

Vertical: The overhead clearance shall not be reduced to less than fifteen (15) feet at any location.

The restrictions above apply to all shifts, lane closures, on-site detours and off site detours whether shown in the contract or proposed by the Contractor. It shall be the responsibility of the Contractor to verify that these minimum requirements have been met before proceeding with any phase of the Work.

Two-lane two-way roadways may have temporary horizontal restrictions of less than sixteen (16) feet provided a flagger operation for one-way traffic is utilized to restrict access to the work area by over- width loads. The minimum horizontal clearance shall be restored before the flagging operation is removed.

c. Highway Work Zone: All sections or segments of the roadway under construction or reconstruction shall be signed as a Highway Work Zone except non-state highway two-lane two-way resurfacing projects. Two conditions can be applied to a Highway Work Zone. Condition 1 is when no reduction in the existing speed limit is required. Condition 2 is when worksite conditions require a reduction of the speed limit through the designated Work Zone. Properly marking a Highway Work Zone shall include the following minimum requirements:

1. NO REDUCTION IN THE EXISTING POSTED SPEED LIMIT IN HIGHWAY WORK ZONE:

a) Signage (Detail 150-Hwz-2) shall be posted at the beginning point of the Highway Work Zone warning the traveling public that increased penalties for speeding violations are in effect. The HWZ-2 sign shall be placed a minimum of six hundred (600') feet in advance of the Highway Work Zone and shall not be placed more than one thousand (1000') feet in advance of the Work Zone. If no speed reduction is required it is recommended that the HWZ-2 be placed at 750 feet from the work area between the ROAD WORK 500FT. and the ROAD WORK 1000 FT. signs.

HWZ-2 signs shall be placed at intervals not to exceed one mile for the length of the project. HWZ-2 signs should be placed on the mainline after all major intersections except State Routes. State Routes shall be signed as per the requirements for

intersecting roadways below.

b) The existing speed limit shall be posted at the beginning of the Work Zone. Existing Speed Limit signs (R2-1) shall be maintained.

c) INTERSECTING ROADWAYS: Intersecting state routes shall be signed in advance of each intersection with the Work Zone with a HWZ-2 sign to warn motorists that increased fines are in effect. All other intersecting roadways that enter into a designated Highway Work Zone may be signed in advance of each intersection

With the Work Zone. When construction equipment and personnel are present in the intersection on the mainline of a multi-lane roadway, the intersecting side roads shall be signed in advance with HWZ-2 signs. As soon as the work operation clears the intersection the signage may be removed.

d) Signage (Detail 150-HWZ-3) shall be posted at the end of the Highway Work Zone indicating the end of the zone and indicating that increased penalties for speeding violations are no longer in effect.

e) When a designated Highway Work Zone is no longer necessary all signs shall be removed immediately.

2. REDUCING THE SPEED LIMIT IN A HIGHWAY WORK ZONE:

Highway Work Zone signs shall be posted as required in Condition 1above.

For limited access (interstate) highways and controlled access multi-lane divided highways the posted speed limit shall be reduced as required below.

Speed Limit signage (R2-1) for the reduced speed limit shall be erected at the beginning of the work zone. Additional signs shall be placed to ensure that the maximum spacing of the reduced speed limit signs shall be no greater than one (1) mile apart. Existing speed limit signs shall be covered or removed. On multi-lane divided highways the speed limit signs shall be double indicated when the reduced speed is in use.

When any one or more of the following conditions exist and the existing speed limit is 65 mph or 70 mph, the speed limit shall be reduced by 10 mph. If the existing speed limit is 60 mph, thespeed limit should be reduced by 5 mph. If the existing speed limit is 55 mph or less, the Contractor can only reduce the speed limit with the prior approval of the Lumpkin County Public Works Department. The reduction in the speed limit shall be no greater than 10 mph:

a) Lane closure(s) of any type and any duration.
b) The difference in elevation exceeds two inches adjacent to a travel lane as shown in Subsection 150.06, Detail150-B, 150-C.
c) Any areas where equipment or workers are within ten feet of a travel lane.
d) Temporary portable concrete barriers located less than two (2') feet from the traveled way.
e) As directed by the Lumpkin County Public Works Department for conditions distinctive to this project.

When the above conditions are not present the speed limit shall be immediately returned to the existing posted speed limit. A speed reduction shall not be put in place for the entire length of the project unless conditions warranting the speed reduction are present for the entire project length. All existing speed limit signs within the temporary speed reduction zone shall be covered or removed while the temporary reduction in the speed limit is in effect. All signs shall be erected to comply with the minimum requirements of the MUTCD.

As a minimum the following records shall be kept by the WTCS:

a) Identify the need for the reduction.
b) Record the time of the installation and removal of the temporary reduction.
c) Fully describe the location and limits of the reduced speed zone.
d) Document any accident that occurs during the time of the reduction.

A copy of the weekly records for reduced speed zones shall be submitted to the Lumpkin County Public Works Department.

Reduced speed zones shall, as a minimum, be signed as per Detail150-HWZ-1. Interim signs shall meet the requirements of 150.03 D. Additional signs may be necessary to adjust for actual field conditions.

When a pilot vehicle is used on a two-lane two-way roadway the speed limit should not be reduced. For special conditions specific to the work, on two-lane two-way roadways or multi-lane highways, the contractor may reduce the posted speed limit with the prior approval of the Lumpkin County Public Works Department.

5. MILLED SURFACE RESTRICTIONS:

Unless modified by the special conditions, a milled surface on any asphaltic concrete surface shall not be allowed to remain open to traffic for a period of time that exceeds thirty (30) calendar days.

6. INSTALLATION/REMOVAL OF WORK AREA SIGNAGE:

No payment will be made for Traffic Control-Lump Sum until the Work has actually started on the project. The installation of traffic control signage does not qualify as the start of work. Advanced warning signs shall not be installed until the actual beginning of work activities. Any permanent mount height signs Installed as the work is preparing to start shall be covered until all signs are installed unless all signs are installed within seven (7) calendar days after beginning installation.

All temporary traffic control devices shall be removed as soon as practical when these devices are no longer needed. When work is suspended for short periods of time, temporary traffic control devices that are no longer appropriate shall be removed or covered.

All construction warning signs shall be removed within seven (7) calendar days after time charges are stopped or pay items are complete. If traffic control devices are left in place for more than ten (10) calendar days after completion of the Work, the County shall have the right to remove such devices, claim possession thereof, and deduct the cost of such removal from any monies due, or which may become due, the Contractor.

PUNCHLIST WORK: Portable signs shall be utilized to accomplish the completion of all punch-list items. The portable signs shall be removed daily. All permanent mount height signs shall be removed prior to the beginning of the punch-list work except "Low/Soft Shoulder" signs and any signs that have the prior written approval of the Lumpkin County Public Works Department to remain in place while the punch-list work is in progress.

Failure to promptly remove the construction warning signs within the seven (7) calendar days after the completion of the Work or failure to remove or cover signs when work is suspended for short periods of time shall be considered as nonperformance under Section 150.08.

C. LANE CLOSURES:

1. Approval/Restrictions

All lane closures of any type or duration shall have the prior approval of the Lumpkin County Public Works Department.

a. The length of a lane closure shall not exceed two (2) miles in length excluding the length of the tapers unless the prior approval of the Lumpkin County Public Works Department has been obtained. The Lumpkin County Public Works Department may extend the length of a lane closure based upon field conditions however the length of a work-zone should be h e l d to the minimum length required to accomplish the Work. Lane closures shall not be spaced closer than one mile. The advanced warning signs for the project should not overlap with the advanced warning signs for lane shifts, lane closures, etc.…

b. Lane closures that require same direction traffic to be split around the Work Area will not be approved for roadways with posted speeds of 35 mph or greater, excluding turn lanes.

c. For Interstate, Limited Access and Multi-lane Divided Highways, a Portable Changeable Message Sign (PCMS) shall be placed one (1) mile in advance of a lane closure with a message denoting the appropriate lane closure one mile ahead. The Portable Changeable Message Sign (PCMS) shall be placed on the outside shoulder in accordance with Detail 150-PCMS. This is in addition to the other traffic control devices required by Standard 9106. ·

2. Removal of Lane Closures

To provide the greatest possible convenience to the public in accordance with Sub• Subsection 107.07, the Contractor shall remove all signs, lane closure markings, and devices immediately when lane closure work is completed or temporarily suspended for any length of time or as directed by the Lumpkin County Public Works Department. All portable signs and portable sign mounting devices shall be removed from the roadway to an area which will not allow the sign to be visible and will not allow the sign or sign mounting device to be impacted by traffic.

3. Exit and Entrance Ramps

On multilane highways where traffic has been shifted to the inside lanes, the exit a n d entrance ramps shall have channelization devices placed on both sides of the ramp. This requirement will apply to any situation where traffic is shifted to contra flows or inside staging lanes to facilitate reconstruction work in the vicinity of exit and entrance ramps. The temporary ramp taper length shall be greater than, or equal to, the existing taper length. ·Interim EXIT gore signs shall be placed at the ramp divergence. The "EXIT OPEN" sign shown in Figure TA-42 of the MUTCD shall be utilized. For exit ramps, channelization device spacing shall be decreased to 10 feet for 200 feet in advance of the temporary gore, and be decreased to 10 feet for the first 100 feet of the temporary gore.

4. Lane Drop/Lane Closure

The first seven (7) calendar days of any lane closure shall be signed and marked as per Standard 9106 or 9107. However, lane closures that exist for a duration longer than seven (7) Calendar days may be signed and marked as per the details in Standard 9121, provided the prior approval of the Lumpkin County Public Works Department is obtained. The approved lane drop shall utilize only the signs and markings shown for the termination end of the lane drop in Standard 9121. All warning signs in the lane drop sequence shall be used. Drums may be substituted for the Type 1Crystal Delineators at the same spacing.

5. Termination Area

The transition to normal or full width highway at the end of a lane closure shall be a maximum of 150 feet.

D. TRAFFIC PACING METHOD:

1. Pacing Of Traffic

With prior approval from the Lumpkin County Public Works Department, traffic may be paced allowing the Contractor up to ten (10) minutes maximum to work in or above all lanes of traffic for the following purposes:

a. Placing bridge members or other bridge work.

b. Placing overhead sign structures.

c. Other work items requiring interruption of traffic.

The Contractor shall provide a uniformed police officer with patrol vehicle and blue flashing light for each direction of pacing. The police officer, Lumpkin County Public Works Department, and flaggers at ramps shall be provided with a radio which will provide continuous contact with the Contractor.

When ready to start the work activity, the ·police vehicle will act as a pilot vehicle slowing the traffic thereby providing a gap in traffic allowing the Contractor to perform the Work. Any on-ramps between the pace and the work area shall be blocked during pacing of traffic, with a flagger properly dressed and equipped with a Stop/Slow paddle. Each ramp should be opened after the police vehicle has passed.
Pilot vehicles shall travel at a safe pace speed, desirably not less than 20 mph interstate and 10 mph non-interstate. The Contractor shall provide a vehicle to proceed in front of the police vehicle and behind the other traffic in order to inform the Contractor's work force when all vehicles have cleared the area.

Traffic will not be permitted to stop during pacing except in extreme cases as approved by the Lumpkin County Public Works Department.

2. Methods of Signing For Traffic Pacing

At a point not less than 1,000 feet in advance of the beginning point of the pace, the Contractor shall erect and cover a W-special sign (72 inch x 72 inch) with a Type "B" flashing light, with the legend "TRAFFIC SLOWED AHEAD SHORT DELAY" (See Detail 150-A). A portable changeable message sign may be used in lieu of the W-special sign.· On divided highways this sign shall be double indicated. A worker with a two• way radio shall be posted at the sign, and upon notice that the traffic is to be paced shall turn on the flashing light and reveal the sign. When traffic is not being paced, the flashing light shall be turned off and the sign covered or removed. W-special signs are reflectorized black on orange, Series "C" letter and border of the size specified.

1''' MADill!
,,,.,. BCJt0£1
3''' tiDlUS

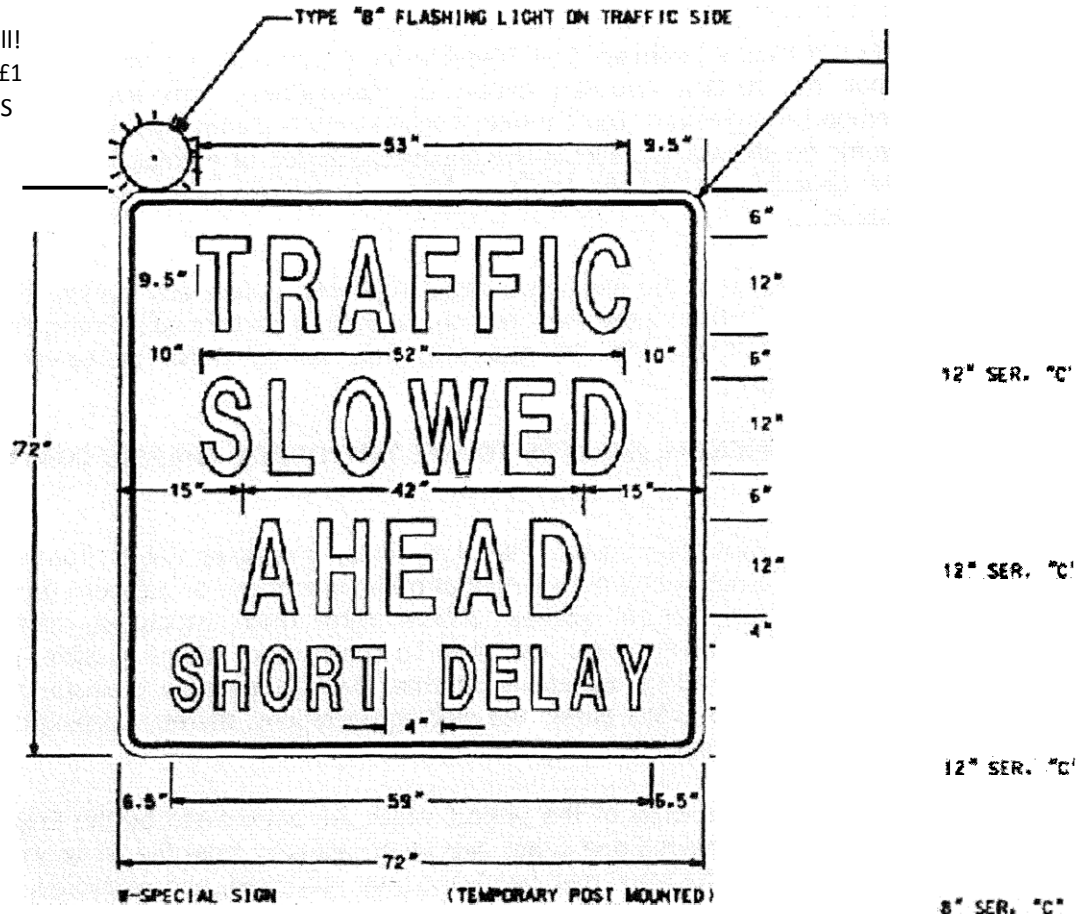

SIGN SHALL HAVE BLACK LEGEND AND BORDER
ON ORANGE REFLECTORIZED BACKGROUND

DETAIL150-A

E. CONSTRUCTION VEHICLE TRAFFIC

The Contractor's vehicles shall travel in the direction of normal roadway traffic and shall not reverse direction except at intersections, interchanges, or approved temporary crossings. The Contractor may submit a plan requesting that construction traffic be allowed to travel in the opposite direction of normal traffic when it would be desirable to modify traffic patterns to accommodate specific construction activities.

Prior approval of the Lumpkin County Public Works Department shall be obtained before any construction traffic is allowed to travel in a reverse direction. If the Contractor's submittal is approved the construction traffic shall be separated from normal traffic by appropriate traffic control devices.

F. ENVIRONMENTAL IMPACTS TO THE TEMPORARY TRAFFIC.CONTROL (TTC) PLAN

The Contractor shall ensure that dust, mud, and other debris from construction activities do not interfere with normal traffic operations or adjacent properties. All outfall ditches, special ditches, critical storm drain structures, erosion control structures, retention basins, etc. shall be constructed, where possible, prior to the beginning of grading operations so that the best possible drainage and erosion control will be in effect during the grading operations, thereby keeping the roadway areas as dry as possible.

Areas within the limits of the project which are determined by the Lumpkin County Public Works Department to be disturbed or damaged due either directly or indirectly from the progress or the lack of progress of the work shall be cleaned up, redressed, and re-grassed. All surplus materials shall be removed and disposed of as required. Surplus materials shall be disposed of in accordance with Subsection 201.02.E.3 of the Specifications.

G. EXISTING STREET LIGHTS

Existing street lighting shall remain lighted as long as practical and until removal is approved by the Lumpkin County Public Works Department.

H. NIGHTWORK

Adequate temporary lighting shall be provided at all nighttime work sites where workers will be immediately adjacent to traffic.

I. **CONSTRUCTION VEHICLES IN THE WORKZONE**

The parking of Contractor's and/or workers personal vehicles within the work area or adjacent to traffic is prohibited. It shall be the responsibility of the Worksite Traffic Control Supervisor to ensure that any vehicle present at the worksite is necessary for the completion of the work.

J. ENCROACHMENTS ON THE TRAVELED-WAY

The Worksite Traffic Control Supervisor (WTCS) shall monitor the work to ensure that all the rocks, boulders, construction debris, stockpiled materials, equipment, tools and other potential hazards are kept clear of the travel-way. These items shall be stored in a location, in so far as practical, where they will not be subject to a vehicle running off the road and striking them.

K. PEDESTRIAN CONSIDERATIONS

All existing pedestrian facilities, including access to transit stops, shall be maintained. Where pedestrian routes are closed, alternate routes shall be provided. Closures of existing, interim and final pedestrian facilities shall have the prior written approval of the Lumpkin County Public Works Department. When existing pedestrian facilities are disrupted, closed or relocated in a TTC zone, the temporary facilities shall be detectable and shall include accessibility features consistent with the features present in the existing pedestrian facility. Pedestrian facilities are considered improvements and provisions made to accommodate or encourage walking. Whenever a sidewalk is to be closed, the Lumpkin County Public Works Department shall notify the maintaining agency two (2) weeks prior to the closure. Prior to closure, detectable barriers (that are detectable by a person with a visual disability traveling with the aid of a long cane), as described by the MUTCD, shall be placed across the full width of the closed sidewalk. Barriers and channelizing devices used along a temporary pedestrian route shall be in compliance with the MUTCD.

Temporary Traffic Control devices used to delineate a Temporary Traffic Control zone pedestrian walkway shall be in compliance with Subsection 150.01.C. Temporary Traffic Control devices and construction material shall not intrude into the usable width of the pedestrian walkway. Signs and other devices shall be placed such that they do not narrow or restrict any pedestrian passage to less than 48 inches.

A pedestrian walkway shall not be severed or relocated for non-construction activities such as parking for construction vehicles and equipment. Movement by construction vehicles and equipment across designated pedestrian walkways should be minimized. When necessary, construction activities shall be controlled by flaggers. Pedestrian walkways shall be kept free of mud, loose gravel or other debris.

When temporary covered walkways are used, they shall be lighted during night-time hours. When temporary traffic barrier is used to separate pedestrian and vehicular traffic, the temporary barrier shall meet NCHRP-350 Test Level Three. The barrier ends shall be protected in accordance with Georgia Standard 4960. Curbing shall not be used as a substitute for temporary traffic barriers when temporary traffic barriers are required. Tape, rope or plastic chain strung between temporary traffic control devices are not considered as detectable and shall not be used as a control for pedestrian movements.

The WTCS shall inspect the activity area daily to ensure that effective pedestrian TTC is being maintained. The inspection of TTC for pedestrian traffic shall be included as part of the TC-1 report.

1. **Temporary Pedestrian Facilities**

Temporary pedestrian facilities shall be detectable and include accessibility features consistent with the features present in the existing pedestrian facility. The geometry, alignment and construction of the facility should meet the applicable requirements of the "Americans with Disabilities Act Accessibility Guidelines for Buildings and Facilities (ADAAG)".

a. Temporary Walkways with Detectable Edging

A smooth, continuous hard surface (firm, stable and slip resistant) shall be provided throughout the entire length of the temporary pedestrian facility. Compacted soils, sand, crushed stone or asphaltic pavement millings shall not be used as a surface course for walkways.

Temporary walkways shall include detectable edging as defined in the MUTCD. When temporary traffic barrier is included as a pay item in the contract and where locations identified on the plans for positive protection will also allow them to serve as pedestrian detectable edging, payment will be made for the temporary traffic barrier in accordance with Section 620. No payment will be made for temporary walkways with Detectable Edging where existing pavements or existing edging (that meets the requirements of MUTCD) are utilized as temporary walkways. Payment for temporary detectable edging, including approved barriers and channelizing devices, installed on existing pavements shall be included in Traffic Control-Lump Sum.

Regardless of the materials used, temporary walkways shall be constructed of sufficient thickness and durability to withstand the intended use for the duration of the construction project. If concrete or asphalt is used as the surface course for the walkway, it shall be a minimum of one and one-half inches (1-1/2'1thick. Temporary walkways constructed across unimproved streets and drives shall be a minimum thickness of four inches (4'1for concrete and three inches (3'1 for asphalt. Joints formed in concrete sidewalks shall be in accordance with Section 441. Concrete surfaces shall have a broom finish.

If plywood is used as a walkway, it must be a minimum of three quarters of an inch (3/4'1thick pressure treated and supported with pressure treated longitudinal joists spaced a maximum of sixteen inches (16’1on center. The plywood shall be secured to the joist with galvanized nails or galvanized deck screws. Nails and screws shall be countersunk to prevent snagging or tripping the pedestrians. A slip resistant friction course shall be applied to any plywood surface that is used as a walkway. Any slip resistant material used shall have the prior written approval of the Lumpkin County Public Works Department.

The contractor may propose alternate types of Temporary Walkways provided the contractor can document that the proposed walkway meets the requirements of the "Americans with Disabilities Act Accessibility Guidelines for Buildings and Facilities (ADAAG)". Alternate types of Temporary Walkways shall have the prior written approval of the Lumpkin County Public Works Department.

Temporary walkways shall be constructed and maintained so there are no abrupt changes in grade or terrain that could cause a tripping hazard or could be a barrier to wheelchair use. The contractor shall construct and maintain the walkway to ensure that joints in the walkway have a vertical difference in elevation of no more than one quarter (1/4'') of an inch and that the horizontal joints have gaps no greater than one half (1/2'') of an inch. The grade of the temporary walkway should parallel the grade of the existing walkway or roadway and the cross slope should be no greater than 2°/o.

A width of sixty (60'') inches, if practical, should be provided throughout the entire length of any temporary walkway. The temporary walkway shall be a minimum width of forty eight inches (48''). When it is not possible to maintain a minimum width of sixty inches (60'') throughout the entire length of temporary walkway, a sixty inch (60'') by sixty inch (60'') passing space should be provided at least every two hundred feet (200Ft.),to allow individuals in wheelchairs to pass.

Temporary walkways shall be constructed on firm subgrade. Compact the subgrade according to Section 209. Furnish and install any needed temporary pipes prior to constructing any walkway to ensure positive drainage away from or beneath the temporary walkway. Once the walkway is no longer required, remove any temporary materials and restore the area to the original conditions or as shown in the plans.

b. Temporary Curb Cut Wheelchair Ramps

Temporary curb cut wheelchair ramps shall be constructed in accordance with Section 441and Detail A-3. Ramps shall also include a detectable warning surface in accordance with Detail A-4. Other types of material for the construction of the temporary curb cut wheelchair ramps, including the detectable warning surface, may be used provided the contractor can provide documentation that the material to be used meets the requirements of the "Americans with Disabilities Act Accessibility Guidelines for Buildings and Facilities (ADAAG)". When a wheelchair ramp is no longer required, remove the temporary materials and restore the area to existing conditions or as shown in the plans. For the items required to restore the area to original conditions or as shown in the plans, measures for payment shall be covered by contract pay items. If pay items are not included in the contract, then payment for these items shall be included in Traffic Control-Lump Sum.

c. Temporary Audible Information Device

Temporary audible information devices, when shown in the plans, shall be installed in compliance with the "Americans with Disabilities Act Accessibility Guidelines for Buildings and Facilities (ADAAG)". The devices shall be installed in accordance with the manufacturer's recommendations. Prior to installation, the contractor shall provide the Lumpkin County Public Works Department with a set of manufacturer's drawings detailing the proper installation procedures for each device. When no longer required, the devices shall remain the property of the contractor.

L. TRAFFIC SIGNALS

If the sequence of operations, staging, or the temporary traffic control plan requires the relocation or shifting of any components of an existing traffic signal system then any work on these traffic signals will be considered as part of Lump Sum- Traffic Control. The contractor becomes responsible for the maintenance of these traffic signals from the time that the system is modified until final acceptance. The maintenance of traffic signals that are not a part of the work and are not in conflict with any portion of the work shall not be the responsibility of the contractor.

When construction operations necessitate an existing traffic signal to be out of service, the Contractor shall furnish off-duty police officers to regulate and maintain traffic control at the site. Off-duty police officers should be used to regulate and maintain traffic control at signal sites when lane closures or traffic shifts block or restrict movements causing interference with normal road user flows and will not allow the activated traffic signal to guide the traffic through the signal site.

M. REMOVAL/REINSTALLATION OF MISCELLANEOUS ITEMS

In the prosecution of the Work, if it becomes necessary to remove any existing signs, markers, guardrail, etc. not covered by specific pay item, they shall be removed, stored and reinstalled, when directed by the Lumpkin County Public Works Department, to line and grade, and in the same condition as when removed.

150.3 SIGNS:

A. SIGNING REQUIREMENTS OF THE TEMPORARY TRAFFIC CONTROL {TTC) PLAN

When existing regulatory, warning or guide signs are required for proper traffic and pedestrian control the Contractor shall maintain these signs in accordance with the temporary traffic control (TTC) plan. The Contractor shall review the status of all existing signs, interim signs added to the work, and permanent sign installations that are part of the work to eliminate any conflicting or non-applicable signage in the TTC Plan. The Contractor's review of all signs in the TTC Plan shall establish compliance with the requirements of the MUTCD and Section 150. Any conflicts shall be reported to the Lumpkin County Public Works Department immediately and the WTCS shall take the necessary measures to eliminate the conflict.

The Contractor shall make every effort to eliminate the use of interim signs as soon as the Work allows for the installation of permanent signs.

All existing illuminated signs shall remain lighted and be maintained by the Contractor.

Existing street name signs shall be maintained at street intersections.

B. CONFLICTING OR NON-APPLICABLE SIGNS

Any sign(s) or portions of a sign(s) that are not applicable to the TTC plan shall be covered so as not to be visible to traffic or shall be removed from the roadway when not in use. The WTCS shall review all traffic shifts and changes in the traffic patterns to ensure that all conflicting signs have been removed. The review shall confirm that the highest priority signs have been installed and that signs of lesser significance are not interfering with the visibility of the high priority signs. High priority signs include signs for road closures, shifts, detours, lane closures and curves. Any signs, such as speed zones and speed limits, passing zones, littering fines and litter pick up, that reference activities that are not applicable due to the presence of the Work shall be removed, stored and reinstalled when the Work is completed.

Failure to promptly eliminate conflicting or non-applicable signs shall be considered as non-performance under Section 150.08.

C. REMOVAL OF EXISTING SIGNS AND SUPPORTS

The Contractor shall not remove any existing signs and supports without prior approval from the Lumpkin County Public Works Department. All existing signs and supports which are to be removed shall be stored and protected if this material will be required later in the work as part of the TTC plan. If the signs are not to be utilized in the work then the signs will become the property of the Contractor unless otherwise specified in the contract documents.

D. INTERIM GUIDE, WARNING AND REGULATORY SIGNS

Interim guide, warning, or regulatory signs required to direct traffic and pedestrians shall be furnished, installed, reused, and maintained by the Contractor in accordance with the MUTCD, the Plans, Special Provisions, Special Conditions, or as directed by the Lumpkin County Public Works Department. These signs shall remain the ·property of the Contractor. The bottom of all interim signs shall be mounted at least seven (7') feet above the level of the pavement edge when the signs are used for long-term stationary operations as defined by Section 6G.02 of the MUTCD. Special Conditions under Subsection 150.11 may modify this requirement.

Portable signs may be used when the duration of the work is less than three (3) days or as allowed by the special conditions in Subsection 150.11. Portable signs shall be used for all punch-list work. All portable signs and sign mounting devices utilized in work shall be NCHRP 350 compliant. Portable interim signs shall be mounted a minimum of one (1')foot above the level of the pavement edge for directional traffic of two (2) lanes or less and a minimum of seven (7') feet for directional traffic of three (3) or more lanes. Signs shall be mounted at the height recommended by the manufacturer's crashworthy testing requirements. Portable interim signs which are mounted at less than seven (7') feet in height may have two 18 inch x 18 inch fluorescent red-orange or orange-red warning flags mounted on each sign.

All regulatory sign blanks shall be rigid whether the sign is mounted as a portable sign, on a Type III barricade or as a permanent mount height sign.

Any permanent mount height interim sign that is designed to fold in half to cover a non-applicable message on the sign shall have reflectorized material on the folded over portion of the sign. The reflectorized material shall be orange in color with a minimum of ASTM Type I engineering grade sheeting with a minimum area of six inches by six inches (6" x 6") facing the direction of traffic at all times when the sign is folded.

Interim signs may be either English or metric dimensions.

E. EXISTING SPECIAL GUIDE SIGNS

Existing special guide signs on the Project shall be maintained until conditions require a change in location or legend content. When change is required, existing signs< shall be modified and continued in use if the required modification can be made within existing sign borders using design requirements (legend, letter size, spacing, border, etc.) equal to that of the existing signs, or of Sub-Section 150.03.E.2. Differing legend designs shall not be mixed in the same sign.

1. Special Guide Signs

Special guide signs are those expressway or freeway guide signs that are designed with a message content (legend) that applies to a particular roadway location. When an existing special guide sign is in conflict with work to be performed, the Contractor shall remove the conflicting sign and reset it in a new, non-conflicting location which has been approved by the Lumpkin County Public Works Department.

2. Interim Special Guide Signs

When it is not possible to utilize existing signs, either in place or relocated, the Contractor shall furnish, erect, maintain, modify, relocate, and remove new interim special guide signs in accordance with the Plans or as directed by the Lumpkin County Public Works Department. Interim special guide signs that may be required in addition to, or a replacement for, existing expressway and freeway (interstate) signs shall be designed and fabricated in compliance with the minimum requirements for guide signing contained in Part 2E "Guide Signs Expressway" and Part 2F "Guide Signs Freeways" of the MUTCD, except that the minimum size of all letters and numerals in the names and places, streets and highways on all signs shall be 16 inches Series "E" initial upper-case and 12 inches lower-case. All interstate shields on these signs shall be 48 inches and 60 inches for two-numeral and three-numeral routes, respectively.

The road name of the exit or route shield shall be placed on the exit gore sign.

3. Interim Overhead Guide Sign Structures

Interim overhead special guide sign structures are not required to be lighted unless specifically required by the Plans. If lighting is required the sign shall be lighted as soon as erected and shall remain lighted, during the hours of darkness, until the interim sign is no longer required. The Contractor shall notify the Power Company at least thirty (30) Days prior to desired connection to the power source.

4. **Permanent Special Guide Signs**

The installation of new permanent special guide signs and the permanent modification or resetting of existing special guide signs, when included in the contract, shall be accomplished as soon as practical to minimize the use of interim special guide signs. If lighting is required by the Plans, all new permanent overhead special guide signs shall be lighted as soon as erected.

F. MATERIALS- INTERIM SIGNS:

1. **Posts**

Permanent mounting height of seven (7') feet- Posts for all interim signs shall meet the requirements of Section 911 except that green or silver paint may be used in lieu of galvanization for steel posts or structural shape posts. Within the limits of a single project, all metal posts shall be the same color. Wood posts are not required to be pressure treated. Ground mounted sign(s) greater than nine (9) square feet shall be mounted on two posts.

Interim posts may be either metric or English in dimensions.

Posts for all interim signs shall be constructed to yield upon impact unless the posts are protected by guardrail, portable barrier, impact attenuator or other type of positive barrier protection. Unprotected posts shall meet the breakaway requirements of the "1994 AASHTO Standard Specifications for Structural Support for Highway Signs, Luminaries and Traffic Signals". Unprotected interim posts shall be spliced as shown in Detail150-F unless full length un-spliced posts are used.

Unprotected post splices will not be permitted any higher than four inches above the ground line to lessen the possibility of affecting the undercarriage of a vehicle. Installation of posts may require establishment of openings in existing pavements, islands, shoulders etc.

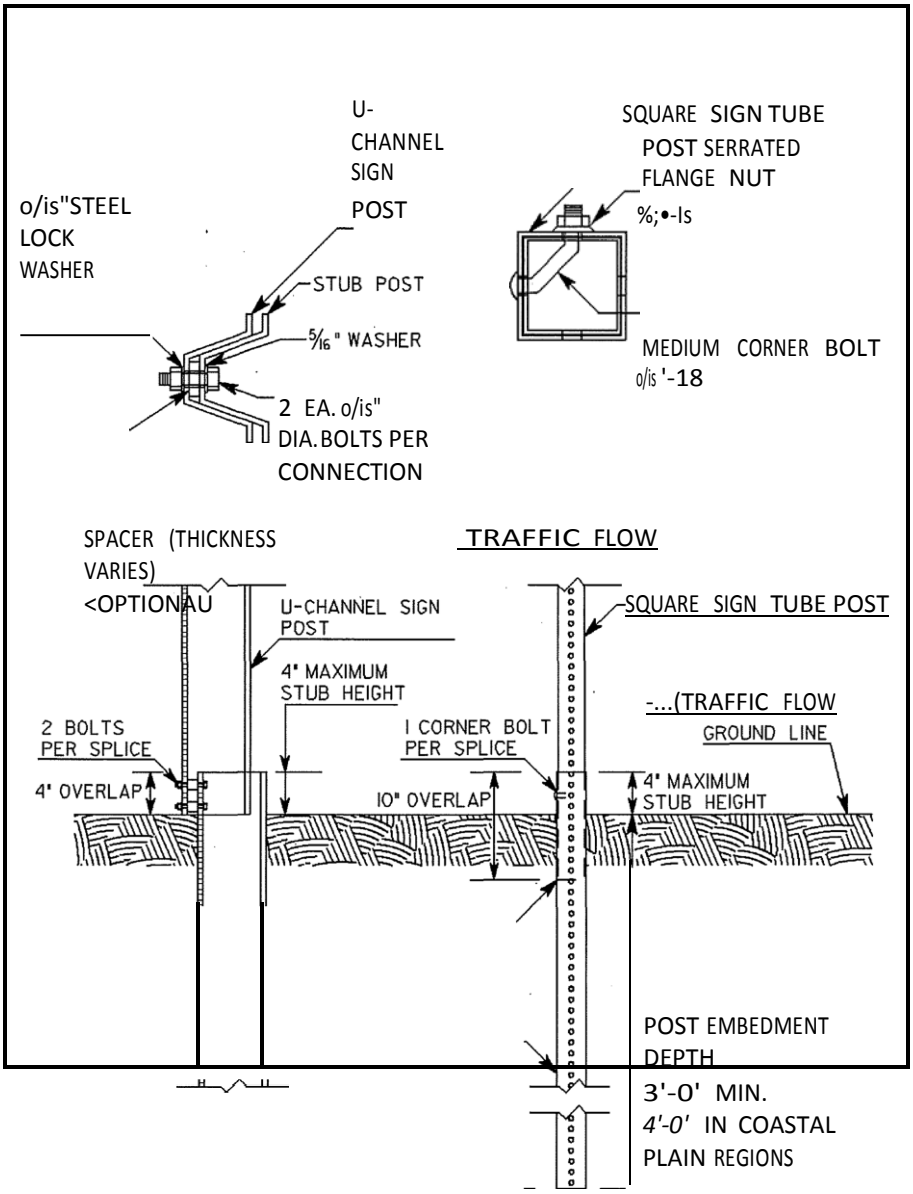

POST SHALL EXTEND
6" MINIMUM BELOW
GROUND LEVEL

SQUARE SIGN TUBE
STUB POST
U-CHANNEL SIGN

DETAIL 150-F

2. **Sign Blanks And Panels- Permanent mounting height of seven (7') feet•** All sign blanks and panels shall conform to Section 912 of the Specifications except that blanks and panels may be ferrous based or other metal alloys. Type 1 and Type 2 sign blanks shall have a minimum thickness of 0.08 inches regardless of the sign type used. Alternative sign blank materials (composites, poly carbonates, fiberglass reinforced plastics, recycled plastics, etc.) shall have a letter of approval from the Office of Materials and Research for use as interim construction signs before these materials are allowed to be incorporated into the work unless these rigid sign blanks are currently approved as a crashworthy sign blank material under QPL 34.The back side of sign panels shall be painted orange to prevent rust if other metals are used in lieu of aluminum. Plywood blanks or panels will not be permitted. The use of flexible
Signs will not be permitted for permanent mount height signs.

   Interim blanks and panels may be either metric or English in dimensions.

3. **Portable Sign Mounting Devices, Portable Sign Blanks-**
   All portable sign mounting devices and sign blanks utilized in the work shall be NCHRP 350 Test Level III compliant. All portable sign mounting devices and sign blanks shall be from the Qualified Products List. Any sign or sign mounting device shall have an identifying decal, logo, or manufacturer's stamping that clearly identifies the device as NCHRP 350 compliant. The required decal, logo or manufacturer's stamping shall not be displayed on the message face of the sign. The Contractor may be required to provide certification from the Manufacturer as proof of NCHRP 350 compliance. All portable signs shall be mounted according to height requirements of Subsection 150.03.D.

G. SIGN VISIBILITY AND OFFSETS

All existing, interim and new permanent signs shall be installed so as to be completely visible for an advance distance in compliance with the MUTCD. Any clearing required for maintaining the line of sight to existing, interim or permanent signs shall be done as part of the requirements of the TTC plan. The clearing shall include any advance warning signs, both interim and permanent, that are installed as a part of the work including advance warning signs that are installed outside the limits of the project. Any sign installed behind W-beam or T-beam guardrail with non-breakaway posts shall be installed with the leading edge of the sign a minimum of four feet and three inches (4'3'') behind the face of the guardrail with five feet (5') of clearance being desirable. Limbs, brush,
Construction equipment and materials shall be kept clear of the driver's line of sight to all signs that are part of the TTC plan.

H. ADVANCE WARNING SIGNS:

1. **All Type Of Highways**
   Advance warning signs shall be placed ahead of the work area in accordance with Part VI of the MUTCD and shall include a series of at least three advance road work (W20-1) signs placed at the termini of the project. The series shall have the legend ROAD WORK (1500 FEET, 1000 FEET, AND 500 FEET).

At grade intersecting roadways and on-ramps shall be signed with a minimum of one ROAD WORK AHEAD sign.

When work terminates at a "T" intersection, a minimum of one "ROAD WORK AHEAD" sign shall be placed in advance of the intersection and one "END ROAD WORK" sign shall be placed at the termination end of the intersection. Field conditions may require the use of additional warning signage.

Advanced Warning Signs on State Routes shall be a minimum dimension of 48 inches x 48 inches. When a State Route intersects a project which consists of adding travel lanes, reconstructing an existing roadway or new location work, the State Route approaches shall have a minimum of three (W20-1) advanced warning signs (1500 ft., 1000 ft., 500 ft.). The termination end of an intersecting State Route shall have END ROAD WORK signage.

The W20-1 signs shall be placed at the termini of the project or sufficiently in advance of the termini to allow for lane shifts, lane closures and other activities which may also require advanced warning signs. The advanced warning signs for the project should not overlap with the advanced warning signs for lane shifts, lane closures, etc.

The length of a work-zone should be held to the minimum length required to accomplish the work. If a project has multiple individual worksites within the overalllimits of the project, each site should be signed individually if the advance warning signs for each site can be installed without overlapping an adjacent worksite. As soon as the work is completed at any individual site the warning signs shall be removed from that site. Clean-up work and punch-list work shall be performed with portable signage.

Project mileage indicated on the G20-1 sign shall be the actual project mileage rounded up to the nearest whole mile. Projects less than two (2) miles in length or individual worksites that are part of a multiple worksite project may delete this sign. The G20-1 sign shall be 60" X 36" and the G20-2 sign shall be 48" X 24".

2. Interstate, Limited Access and Multilane Divided Highways

In addition to the W20-1 signs required at 500 ft., 1000 ft. and 1500 ft., multi• lane divided highways shall also have additional advanced warning signs installed with the legend "ROAD WORK (2 MILES,1MILE and 1/2 MILE). All construction warning signs on divided highways shall be double indicated (i.e., on the left and right sides of the roadway.)If the use of the 1/2 mile, 1 mile and 2 mile advanced warning signs cause an overlap with other work or do not benefit field conditions then the Lumpkin County Public Works Department may review the use of these signs and eliminate their installation. When the posted speed limit is 50 MPH or less, the V2 mile, 1 mile and 2 mile signs should be eliminated especially in urban areas.

The W20-1 advance warning signs for ROAD WORK 500 FEET; 1000 FEET; and 1500 FEET shall be temporarily covered when work involving the advanced warning signs for lane shifts and lane closures overlap these signs. The ROAD WORK V2 MILE, ROAD WORK 1 MILE, and ROAD WORK 2 MILES shall be in place when the 500, 1000 and 1500 feet signs are temporarily covered.

When the temporary traffic control zone already has advanced warning (W20-1) signs installed the W20-1 signs required for lane closures under Standard 9106 should be eliminated.

RAMP WORK ON LIMITED ACCESS HIGHWAYS: The work-zone shall not be signed for the entire length of the mainline of a limited access highway when only short individual worksites, interchange or ramp work is being performed.

When work is restricted to ramp reconstruction or widening activities, the advance warning signs on the mainline section of the limited access highway shall be limited to the use of portable advance warning signs. These portable advance warning signs shall only be utilized when work activity is within the gore point of the ramp and the mainline traveled way or work is active in the accel/decel lane adjacent to the mainline traveled way. Portable advance warning signs (W20-1; 1500ft. /1000 ft. /500ft.) shall be installed on the traveled way of the limited access highway when the above conditions are present. The advance warning signs shall be installed only in one direction\"'here work is active. All portable signs shall be double indicated. When work is not active, the ramp work shall be. advanced warned by the use of a single 48 inch X 48 inch "RAMP WORK AHEAD" sign along the right shoulder of the mainline traveled way prior to the beginning of the taper for the decel lane. The "RAMP WORK AHEAD" sign shall be mounted at seven (7') feet in height. Differences in elevation shall be in compliance with the requirements of Subsection 150.06 prior to the removal of the portable (W20-1) advanced warning signs from the mainline.

The G20-1 sign shall be eliminated on limited access highways when the work involves only ramp work, bridge reconstruction, bridge painting, bridge joint repairs, guardrail and anchor replacement or other site specific work which is confined to a short section of limited access highway.

I. PORTABLE CHANGEABLE MESSAGE SIGN

Unless specified as a paid item in the contract the use of a portable changeable message sign will not be required. When specified, a portable changeable message sign (PCMS) shall meet the minimum requirements of Section 632 and the MUTCD. The maximum amount of messages allowed to be flashed on one PCMS is two phases (flashes). The language and the timing of the messages shall comply with the MUTCD and Section 632. When used as an advanced device the PCMS should typically be placed ahead of the construction activities. If the PCMS is used as a substitute for another device then the requirements for the other device apply.

J. FLASHING BEACON

The flashing beacon assembly, when specified, shall be used in conjunction with construction warning signs, regulatory, or guide signs to inform traffic of special road conditions which require additional driver attention. The flashing beacon assembly shall be installed in accordance with the requirements of Section 647.

K. RUMBLE STRIP SIGNAGE

Signage for rumble strips located in the travel-way shall be as required in Subsection 150.0l.C and Subsection 150.02.A.9.

L. PEDESTRIAN SIGNAGE:

Appropriate signs as described in the MUTCD shall be maintained to allow safe passage of pedestrian traffic or to advise pedestrians of walkway closures (Refer to MUTCD Figures TA-28 and TA-29 for guidance). Advance closure signing should be placed at intersections rather than midblock locations so that pedestrians are not confronted with midblock work sites that will induce them to attempt skirting the work site or making a midblock crossing. Signs and other devices mounted lower than seven (7) feet above the temporary pedestrian walkway shall not project more than four (4) inches into the accessible pedestrian facilities. Signs and other devices shall be placed such that they do not narrow any pedestrian passage to less than 48 inches.

150.4 PAVEMENT MARKINGS

A. GENERAL

Full pattern pavement markings in accordance with Section 652 and in conformance with Section 3A and 38, except 38.02, of the MUTCD are required on all courses before the roadway is opened to traffic. No passing zones shall be marked to conform to Subsection 150.04.E. During construction and maintenance activities on all highways open to traffic, both existing markings and markings applied under ·this Section shall be fully maintained until Final Acceptance. If the pavement markings are, or become, unsatisfactory in the judgment of the Lumpkin County Public Works Department due to wear, weathering, or construction activities, they shall be restored immediately.

B. MATERIALS

All traffic striping applied under this Section shall be a minimum five inches in width or as s h o w n in plans and shall conform to the requirements of Section 652, except as modified herein. Raised pavement markers (RPMs) shall meet the requirements of Section 654. Markings on the final surface course, which must be removed, shall be a removable type. The Contractor will be permitted to use paint, thermoplastic, or tape on pavement which is to be overlaid as part of the project, unless otherwise directed by the Lumpkin County Public Works Department. Partial (skip) reflectorization (i.e. reflectorizing only a portion of a stripe) will not be allowed.

C. INSTALLATION AND REMOVAL OF PAVEMENT MARKINGS:

INSTALLATION: All pavement markings, both interim and permanent, shall be applied to a clean surface. The Contractor shall furnish the layout and preline the roadway surface for the placement of pavement markings applied as part of the temporary traffic control plan. All interim marking tape and RPM's on the final surface shall be removed prior to the placement of the final markings.

The Contractor shall sequence the work in such a manner as to allow the installation of markings in the final lane configuration at the earliest possible stage of the work.

REMOVAL: Markings no longer applicable shall be removed in accordance with Subsection 656.3.05.

THE ELIMINATION OF CONFLICTING PAVEMENT MARKINGS BY OVERPAINTING WITH UNAPPROVED PAINT OR ANY TYPE OF LIQUID ASPHALT IS NOT ACCEPTABLE.

INTERMEDIATE SURFACE: Interim markings shall be *removed* by methods that will cause minimal damage to the pavement surface while also ensuring that traveling public will not be confused or misdirected by any residual markings remaining on the intermediate surface. The use of approved black-out tape and black-out paint (manufactured for the sole purpose of covering existing pavement markings) may be permitted on some interim

surfaces, provided the results are satisfactory to the Lumpkin County Public Works Department.

FINAL SURFACE: No interim paint or thermoplastic markings will be permitted on any final surface unless the interim markings are in alignment with the location of the permanent markings and the interim marking will not interfere or adversely affect placement of the permanent markings. The proposed method of removal for layout errors that require markings to be *removed* from the final surface shall have the prior approval of the Lumpkin County Public Works Department. Any damage to the final pavement surface caused by the pavement marking removal process shall be repaired at the Contractor's expense by methods acceptable and approved by the Lumpkin County Public Works Department. Subsection 400.3.06.C shall apply when corrective measures are required. The use of black-out tape or black• out paint will not be permitted under any circumstance to correct layout errors on any final surface.

Traffic shifts that are done on the final surface shall be accomplished using interim traffic marking tape that can be removed without any blemishing of the final surface. Interim traffic marking tape shall be used on any of the following final surfaces; asphaltic concrete, portland cement concrete, and bridge deck surfaces. The contractor may propose alternate traffic markings and removal methods on the final surface. Submitted proposals shall include the type of material, method of removal and a cost comparison to the traffic marking tape method. Prior to any approval, the contractor shall field demonstrate to the satisfaction of the Lumpkin County Public Works Department that the proposed traffic markings can be removed without any blemishing of the final surface. If the proposal is determined to be acceptable, a supplemental agreement will be executed prior to the installation of the proposed alternate traffic· markings. The supplemental agreement shall denote the type of traffic marking materials, method of removal and any cost and/or time savings to the County. The County will not consider or participate in any cost increase that may result from implementing the proposed alternate method.

PAY FACTOR REDUCTION FOR ASPHALTIC CONCRETE FINAL SURFACES: When the correction of an error in the layout of the final pavement markings requires the final surface to be grounded, blemished, scarred, or polished the pay factor shall be reduced to 0.95 for the entire surface area of the final topping that has a blemish, polished or a scarred surface. The reduced pay factor shall not be confined to only the width and length of the stripe or the dimensions of the blemished areas, the whole roadway surface shall have the reduced pay factor applied. The area of the reduced pay factor shall be determined by the total length and the total width of the roadway- affected. If the affected area is not corrected, the reduction in pay shall be deducted from the final payment for the topping layer of asphaltic concrete. The Lumpkin County Public Works Department shall make the final determination whether correction or a reduced pay factor is acceptable.

The eradication of pavement markings on intermediate and final concrete surfaces shall be accomplished by a method that does not grind, polish, or blemish the surface of the concrete. The method used for the removal of the interim markings shall not spall chip the joints in the concrete and shall not damage the sealant in the joints. Any joint or sealant repairs shall be included in the bid price for Traffic Control-Lump Sum. The proposed method of removal shall have the prior approval of the Lumpkin County Public Works Department.

Failure to promptly remove conflicting or non-applicable pavement markings shall be considered as non-performance under Subsection 150.08.

PREPARATION AND PLANNING FOR TRAFFIC SHIFTS: When shifting of traffic necessitates removal of centerline, lane lines, or edge lines, all such lines shall be removed prior to, during, or immediately after any change so as to present the least interference with traffic. Interim traffic marking tape shall be used as a temporary substitute for the traffic markings being removed.

Before any change in traffic lane(s) alignment, marking removal equipment shall be present on the project for immediate use. If marking removal equipment failures occur, the equipment shall be repaired or replaced (including leasing equipment if necessary), so that the removal can be accomplished without delay.

Except for the final surface, markings on asphaltic concrete may be obliterated by an overlay course, when approved by the Lumpkin County Public Works Department. When an asphaltic concrete overlay is placed for the sole purpose of eliminating conflicting markings and the in place asphaltic concrete section will allow, said overlay will be eligible for payment only if designated in the Plans. Overlays to obliterate lines will be paid for only once and further traffic shifts in the same area shall be accomplished with removable markings. Only the minimum asphaltic concrete thickness required to cover lines will be allowed. Excessive build-up will not be permitted. When an overlay for the sole purpose of eliminating conflicting markings is not allowed, the markings

no longer applicable shall be removed in accordance with Subsection 656.3.05.

D. RAISED PAVEMENT MARKERS

Raised pavement markers are not allowed on the right edge lines under any situation:

1. Two Lane Highways

On other highways under construction RPMs shall be used and/or maintained on intermediate pavement surfaces asfollows:

a. SUPPLEMENTING LANELINES AND SOLID LINES

40 foot centers except on lane shifts. (When required in the plans or contract.) 20 foot

centers on lane shifts. (Required in all cases.)

b. SUPPLEMENTING DOUBLE SOLID LINES

40 foot centers (one each beside each line) except on lane shifts. (When required in the Plans or Contract.)

20 foot centers on lane shifts. (Required in all cases.)

E. EXCEPTIONS FOR INTERIM MARKINGS

Some exceptions to the time of placement and pattern of markings are permitted as noted below; however, full pattern pavement markings are required for the completed project.

1. Two-Lane, Two-Way Roadways

a. SKIP LINES

All interim skip (broken) stripe shall conform to Section 652 except that stripes shall be at least two feet long with a maximum gap of 38 feet. On curves greater than six degrees, a one-foot stripe with a maximum gap of 19 feet shall be used. In lane shift areas solid lines will be required. Interim skip lines shall be replaced with markings in full compliance with Section 652 prior to expiration of the 14 calendar day period.

Interim raised pavement markers may be substituted for the interim skip (broken) stripes. If raised pavement markers are substituted for the two foot interim skip stripe, three markers spaced at equal intervals over a two feet distance will be required. No separate payment will be made if the interim raised pavement markers are substituted for interim skip lines.

Interim raised pavement markers shall be retro-reflective, shall be the same color as the pavement markers for which they are substituted, and shall be visible during daytime.

The type of interim marker and method of attachment to the pavement shall be approved by the Office of Materials and Research but in no case will the markers be attached by the use of nails. Flexible reflective markers, Type 14 or Type 15, may be used for a maximum of fourteen (14) calendar days as an interim marker. Any flexible reflective markers in use shall be from the qualified products list (QPL).

The interim raised pavement markers shall be maintained until the full pattern pavement markings are applied. At the time full pattern markings are applied the interim raised markers shall be removed in a manner that will not interfere with application of the full pattern pavement markings.

b. NO PASSING ZONES-TWO-LANE, TWO-WAY ROADWAYS

Passing zones shall be re-established in the locations existing prior to resurfacing. No changes to the location of passing zones shall be done without the written approval of the Lumpkin County Public Works Department. For periods not to exceed three calendar days where interim skip centerlines are in place, no-passing zones shall be identified by using post or portable mounted DO NOT PASS regulatory signs (R4-1 24" x 30'') at the beginning and at intervals not to exceed V2 mile within each no-passing zone. A post or portable mounted PASS WITH CARE regulatory sign (R4-1 24" x 30'') shall be placed at the end of each no-passing zone. Post mounted signs shall be placed in accordance with the MUTCD. Portable signs shall conform to the requirements of the MUTCD and shall be NCHRP 350 compliant. Portable signs shall be secured in such a manner to prevent misalignment and minimize the possibility of being blown over by weather conditions or traffic.

On new location projects and on projects where either horizontal or vertical alignments have been modified, the location of No-Passing Zones will be identified by the Lumpkin County Public Works Department.

c. EDGELINES

1) Bituminous Surface Treatment Paving

Edgelines will not be required on intermediate surfaces (including asphaltic concrete leveling for bituminous surface treatment paving) that are in use for a period of less than 60 calendar days except at bridge approaches, on lane transitions, lane shifts, and in such other areas as determined by the Lumpkin County Public Works Department. On the final surface, edgelines shall be placed within 30 calendar days of the time that the final surface was placed.

2) All Other Types of Pavement

Edgelines will not be required on intermediate surfaces that are in use for a period of less than 30 calendar days except at bridge approaches, on lane transitions, lane shifts, and in such other areas as determined by the Lumpkin County Public Works Department. On the final surface, edgelines shall be placed within 14 calendar days of the time that the surface was placed.

2. Multi-Lane Highways -With No Paved Shoulder(S) or Paved Shoulder(S) Four Feet Or Less

a. UNDIVIDED HIGHWAYS (INCLUDES PAVED CENTER TURN LANE)

1) Centerlines and No-Passing Barrier-Full Pattern centerlines and no passing barriers shall be restored before opening to traffic.

2) Lanelines- Interim skip (broken) stripe as described in Subsection 150.04E.l.a. may be used for periods not to exceed three calendar days. Skiplines are not permitted in lane shift areas. Solid lines shall be used.

3) Edgelines- Edgelines shall be placed on intermediate and final surfaces within three calendar days of obliteration.

b. DIVIDED HIGHWAYS (GRASS OR RAISED MEDIAN)

1) Lanelines- Full pattern skip stripe shall be restored before opening to traffic. Skip lines are not permitted in lane shift areas. Solid lines shall be required.

2) Centerline/Edgeline- Solid lines shall be placed on intermediate and final surfaces within three calendar day's of-obliteration.

3. Limited Access Roadways and Roadways with Paved Shoulders Greater

. **Than Four Feet**

a. Same as Subsection 150.04.E.2 except as noted in (b) below.

b. EDGELINES-

1) Asphaltic Concrete Pavement- Edgelines shall be placed on intermediate and final surfaces prior to opening to traffic.

2) Portland Cement Concrete Pavement- Edgelines shall be placed on any surface open to traffic no later than one calendar day after work is completed on a section of roadway. All water and residue shall be removed prior to daily striping.

4. Ramps for Multi-Lane Divided Highways

A minimum of one solid line edge stripe shall be placed on any intermediate surface of a ramp prior to opening the ramp to traffic. The other edge stripe may be omitted for a maximum period of three (3) calendar days on an intermediate surface. Appropriate channelization devices shall be spaced at a maximum of twenty-five (25') feet intervals until the other stripe has been installed.

The final surface shall have both stripes placed prior to opening the ramp to traffic.

5. MISCELLANEOUS PAVEMENT MARKINGS:

FINAL SURFACE: School zones, railroads, stop bars, symbols, words and other similar markings shall be placed on final surfaces conforming to Section 652 within fourteen (14) calendar days of completion of the final surface. Final markings shall conform to the type of pay item in the plans. When no pay item exists in the plans the final markings shall conform to Section 652 for painted markings.

INTERMEDIATE SURFACE: Intermediate surfaces that will be in use for more than forty- five (45) calendar days shall have the miscellaneous pavement markings installed to conform to the requirement of Section 652. Under Subsection 150.11, Special Conditions, or as directed by the Lumpkin County Public Works Department these markings may be eliminated.

F. MOBILE OPERATIONS

When pavement markings (centerlines, lane lines, and edgelines) are applied in a continuous operation by moving vehicles and equipment, the following minimum equipment and warning devices shall be required. These devices and equipment are in addition to the minimum requirements of the MUTCD.

1. All Roadways

All vehicles shall be equipped with the official slow moving vehicle symbol sign. All vehicles shall have a minimum of two flashing or rotating beacons visible in all directions. All protection vehicles shall have an arrow panel mounted on the rear. All vehicles requiring an arrow panel shall have, as a minimum, a Type B panel. All vehicle mounted signs shall be mounted with the bottom of the sign a minimum height of forty-eight inches (48'') above the pavement. All sign legends shall be covered or removed from view when work is not in progress.

2. Two-Lane Two-Way Roadways

a. Lead Vehicles

The lead vehicle may be a separate vehicle or the work vehicle applying the pavement markings may be used as the lead vehicle. The lead vehicle shall have an arrow panel mounted so that the panel is easily visible to oncoming (approaching) traffic. The arrow panel should typically operate in the caution mode.

b. Work Vehicles

The work vehicle(s) applying markings shall have an arrow panel mounted· on the rear. The arrow panel should typically operate in the caution mode. The work vehicle placing cones shall follow directly behind the work vehicle applying the markings.

c. Protection Vehicles

A protection vehicle may follow the cone work vehicle when the cones are being placed and may follow when the cones are being removed.

3. MULTI-LANE ROADWAYS

A lead vehicle may be used but is not required. The work vehicle placing cones shall follow directly behind the work vehicle applying the markings. A protection vehicle that does not function as a work vehicle should follow the cone work vehicle when traffic cones are being placed. A protection vehicle should follow the cone work vehicle when the cones are being removed from the roadway. Protection vehicles shall display a sign on the rear of the vehicle with the legend PASS ON LEFT (RIGHT).

INTERSTATES AND LIMITED ACCESS ROADWAYS: A protection vehicle shall follow the last work vehicle at all times and shall be equipped with a truck mounted attenuator that is ·certified for impacts not less than 62 mph in accordance with NCHRP350 Test Level Three (3).

A. MISCELLANEOUS ELEVATION DIFFERENTIALS FOR EXCAVATIONS ADJACENT TO THE TRAVELWAY

Drainage structures, utility facilities, or any other work which results in a difference in elevation adjacent to the travel way shall be planned and coordinated to be performed in such a manner to minimize the time traffic is exposed to this condition. The excavation should be back filled to the minimum requirements of Detail 150-E as soon as practical. Stage construction such as plating or backfilling the incomplete work may be required. The difference· in elevation shall not be allowed to exist for more than five (5) calendar days under any circumstances. Failure to correct this condition shall be considered as nonperformance of Work under Subsection 150.08.

B. CONDUIT INSTALLATION IN PAVED AND DIRT SHOULDERS

The installation of conduit and conduit systems along the shoulders of a traveled way shall be planned and installed in a manner to minimize the length of time that traffic is exposed to a difference in elevation condition. The following restrictions and limitations shall apply:

1. Differences in Elevation of Two (2") Inches or Less

The shoulder may remain open when workers are not present. When workers are present the shoulder shall be closed and the channelization devices shall meet the requirements of Subsection 150.05. The difference in elevation on the shoulder shall remain for a maximum period of fourteen (14) Calendar days.

2. Differences in Elevation Greater Than Two (2") Inches

The shoulder shall be closed. The shoulder closure shall not exceed twenty-four (24) hours in duration unless the Special Conditions in Subsection 150.11 modifies this restriction or the Lumpkin County Public Works Department allows the work to be considered as a continuous operation.

Failure to meet these requirements shall be considered as non-performance of Work under Subsection 150.08.

150.5 FLAGGING AND PILOT CARS:

A. FLAGGERS

Flaggers shall be provided as required to handle traffic, as specified in the Plans or Special Provisions, and as required by the Lumpkin County Public Works Department.

B. FLAGGER CERTIFICATION

All flaggers shall meet the requirements of the MUTCD and shall have received training and a certificate upon completion of the training from one of the following organizations:

National Safety Council Southern Safety Services

Construction Safety Consultants Ivey Consultants
American Traffic Safety Services Association
(ATSSA)

Certifications from other agencies will be accepted only if their training program has been approved by any one o f the organizations listed above.

Failure to provide certified flaggers as required above shall be reason for the Lumpkin County Public Works Department suspending work involving the flagger(s) until the Contractor provides the certified flagger(s). Flaggers shall have proof of certification and valid identification (photo I.D.) available any time they are performing flagger duties.

C. FLAGGER APPEARANCE AND EQUIPMENT

Flaggers shall wear high-visibility clothing in compliance with Subsection 150.01.A. The apparel background (outer) material color shall be fluorescent orange-red, fluorescent yellow-green, or a combination of t h e two as defined in the ANSI standard. The retroreflective material shall be orange, yellow, white, silver, yellow• green, or a fluorescent version of these colors, and shall be visible at a minimum distance of one thousand (1000) feet. The retroreflective safety apparel shall be designed to clearly identify the wearer as a person. They shall use a Stop/Slow paddle meeting the requirements of the MUTCD for controlling traffic. The Stop/Slow paddles shall have a shaft length of seven (7) feet minimum. The Stop/Slow paddle shall be retro-reflectorized for both day and night usage. In addition to the Stop/Slow paddle, a flagger may use a flag as an additional device toattract attention. This flag shall meet the minimum requirements of the MUTCD. The flag shall, as a minimum, be 24" inches square and red or red/orange in color. For night work, the vest shall have reflectorized stripes which meet the requirements of the MUTCD.

D. FLAGGER WARNING SIGNS

Signs for flagger traffic control shall be placed in advance of the flagging operation in accordance with the MUTCD. In addition to the signs required by the MUTCD, signs at regular intervals, warning of the presence of the flagger shall be placed beyond the point where traffic can reasonably be expected to stop under the most severe conditions for that day's work.

E. PILOT VEHICLE REQUIREMENTS

Pilot vehicles will be required during placement of bituminous surface treatment or asphaltic concrete on two- lane roadways unless otherwise specified. Pilot vehicles shall meet the requirements of the MUTCD.

F. PORTABLE TEMPORARY TRAFFIC CONTROL SIGNALS

The Contractor may request, in writing, the substitution of portable temporary traffic control signals for flaggers on two-lane two-way roadways provided the temporary signals meets the requirements of the MUTCD, Section 647, and Subsection 150.02.A.8. As a part of this request, the Contractor shall also submit an alternate temporary traffic control plan in the event of a failure of the signals. Any alternate plan that requires the use of
Flaggers shall include the use of certified flaggers. The Contractor shall obtain the approval of the Lumpkin County Public Works Department before the use of any portable temporary traffic control signals will be permitted.

150.6 ENFORCEMENT

The safe passage of pedestrians and traffic through and around the temporary traffic control zone, while minimizing confusion and disruption to traffic flow, shall have priority over all other Contractor activities. Continued failure of the Contractor to comply with the requirements of Section 150 (TRAFFIC CONTROL) will result in non-refundable deductions of monies from the Contract as shown in this Subsection for non- performance of Work.

Failure of the Contractor to comply with this Specification shall be reason for the Lumpkin County Public Works

Department suspending all other work on the Project, except erosion control and traffic control, taking corrective action as specified in Subsection 105.15, and/or withholding payment of monies due to the Contractor for any work on the Project until traffic control deficiencies are corrected. These other actions shall be in addition to the deductions for non-performance of traffic control.

SCHEDULE OF DEDUCTIONS FOR EACH CALENDAR DAY OF DEFICIENCIES OF TRAFFIC CONTROL INSTALLATION AND/OR MAINTENANCE		
ORIGINAL TOTAL CONTRACT AMOUNT		
From More Than	To and Including	Daily Charge
$0	$100,000	$200
$100,000	$1,000,000	$500
$1,000,000	$5,000,000	$1,000
$5,000,000	$20,000,000	$1,500
$20,000,000	$40,000,000	$2,000
$40,000,000	$----------	$3,000

150.7 MEASUREMENT

A. TRAFFIC CONTROL

When listed as a pay item in the Proposal, payment will be made at the Lump Sum price bid, which will include all traffic control not paid for separately, and will be paid as follows:

When the first Construction Report is submitted, a payment of 25 (twenty-five) percent of the Lump Sum price will be made. For each progress payment thereafter, the total of the Project percent complete shown on the last pay statement plus 25 (twenty-five) percent will be paid (less previous payments), not to exceed one hundred (100) percent.

When no payment item for *Traffic Control-Lump Sum* is shown in the Proposal, all of the requirements of Section 150 and the Temporary Traffic Control Plan shall be in full force and effect. The cost of complying with these requirements will not be paid for separately, but shall be included in the overall bid submittal.

B. SIGNS

When shown as a pay item in the contract, interim special guide signs will be paid for as listed below. All other regulatory, warning, and guide signs, as required by the Contract, will be paid for under Traffic Control Lump Sum or included in the overall bid submitted.

1. Interim ground mounted or interim overhead special guide signs will be measured for payment by the square foot. This payment shall be full compensation for furnishing the signs, including supports as required, erecting, illuminating overhead signs, maintaining, removing, re-erecting, and final removal from the Project. Payment will be made only one time regardless of the number of moves required.

2. Remove and reset existing special guide signs, ground mount or overhead, complete, in place, will be m e a s u r e d for payment per each. Payment will be made only one time regardless of the number of moves required.

3. Modify special guide signs, ground mount or overhead, will be measured for payment by the square foot. The area measured shall include only that portion of the sign modified. Payment shall include materials, removal from posts or supports when necessary, and remounting as required.

C. TEMPORARY BARRIER

Temporary Barrier shall be measured as specified in Sections 620.

D. CHANGEABLE MESSAGE SIGN, PORTABLE

Changeable Message Sign, Portable will be measured as specified in Section 632.

E. FLASHING BEACON ASSEMBLY

Flashing Beacon Assemblies will be measured as specified in Section 647.

I. PAVEMENT MARKINGS

Pavement markings will be measured as specified in Section 150.

150.8 PAYMENT:

When shown in the Schedule of Items in the Proposal, the following items will be paid for separately.

Item No. 150 – Traffic Control…….Lump Sum
Item No. 150 – Traffic Control, Solid Traffic Stripe Inch, (Color)……..per Linear Mile

Item No. 150 – Traffic Control, Skip Traffic Stripe _ Inch, (Color)……..per Linear Mile

Item No. 150 – Traffic Control, Solid Traffic Stripe, Thermoplastic _Inch, (Color)…..per Linear Mile
Item No. 150 – Traffic Control, Skip Traffic Stripe, Thermoplastic _ Inch, (Color)……per Linear Mile

Item No. 150 – Traffic Control, Pavement Arrow with Raised Reflectors……per Each
Item No. 150 – Traffic Control, Raised Pavement Markers – All Types…….per Each
Item No. 150 – Interim Ground Mounted Special Guide Signs……per Square Foot Item No. 150 – Interim Overhead Special Guide Signs……..per Square Foot Item No. 150 – Remove & Reset Existing Special Guide Signs, Ground Mount, In Place. Per Each
Item No. 150 – Remove & Reset Existing Special Guide Signs, Overhead, In Place……..per Each Item No. 150 – Traffic Control, Portable Impact Attenuator……per Each
Item No. 150 – Traffic Control, Pavement Markers, Words and Symbols……..per Square Foot Item No. 150 – Traffic Control, Pavement Arrow (Painted) with Raised Reflectors…….per Each
Item No. 150 – Traffic Control, Workzone Law Enforcement……per Hour
Item No. 150 – Modify Special Guide Sign, Ground Mount……..per Square Foot Item No. 150 – Modify Special Guide Sign, Overhead……per Square Foot Item No. 150 – Temporary Walkways With Detectable Edging……per Linear Foot Item No. 150 – Temporary Curb Cut Wheelchair Ramps……..per Each
Item No. 150 – Temporary Audible Information Device……per Each
Item No. 620 - Temporary Barrier……per Linear Foot
Item No. 632 – Changeable Message Sign, Portable……per Each
Item No. 641 – Temporary Guardrail Anchorage, Type 12……per Each
Item No. 647 – Traffic Signal Installation, Temp……Lump Sum
Item No. 647 – Flashing Beacon Assembly, Structure Mounted……per Each
Item No. 647 – Flashing Beacon Assembly, Cable Supported……per Each

400.1.1 Submittals

A. Invoices

When the County requests, furnish formal written invoices from a supplier for all materials used in production of HMA. Show the following on the Bill of Lading:

- Date shipped
- Quantity in tons (mega grams)

Section 429-Rumble Strips

429.1 General Description

This work includes furnishing and placing rumble strips according to plan details and specifications. All Rumble Strips in the summary of quantities are for overlaying existing rumble strips.

Section 636-Highway Signs

636.1 General Description

This work includes fabrication and installing highway signs according to the details on the plans and the manual of uniform traffic control devices. Signs and post must meet the requirements set forth in this section.

Section 647-Flashing Beacon

647.1 General Description

This work includes furnishing and installing a flashing beacon according to the plans, specifications and the manual on uniform traffic control devices.

The flashing beacon assembly, when specified, shall be used in conjunction with construction warning signs, regulatory, or guide signs to inform traffic of special road conditions which require additional driver attention. The flashing beacon assembly shall be installed in accordance with the requirements of Section 647. Detail 925.2.07. Only pedestrian pole mount (as illustrated in TS-12B) should be used on this project.

The Flashing Beacon shall be installed in an operating condition upon completion with electrical hook up included in the price of the installation. Electrical service shall be in Lumpkin County's name.

STATE	COUNTY	PROJECT NUMBER	SHEET NO.	TOTAL SHEETS
GA.				

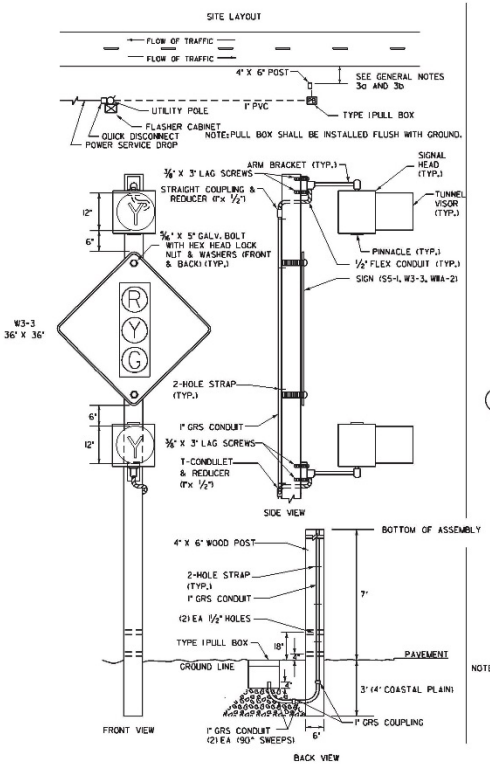

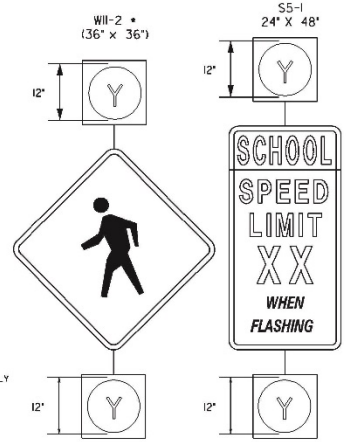

NOTE: SIGN SIZE FOR POLE MOUNTED INSTALLATION SHALL BE BASED ON SECTION 7B.01 OF THE M. U. T. C. D.. THE SCHOOL SPEED LIMIT SIGN (S5-1) SPECIAL 42" X 48" SIGN, SHOWN ON SPAN MOUNTED WARNING FLASHER INSTALLATION DETAIL, MAY BE SUBSTITUTED FOR THE S5-1.

* A FLUORESCENT YELLOW-GREEN BACKGROUND COLOR MAY BE USED FOR THIS SIGN

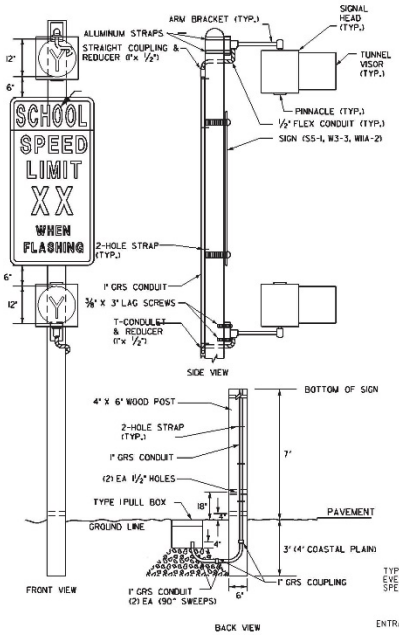

WOOD POLE MOUNTED
FLASHING SCHOOL SIGNAL

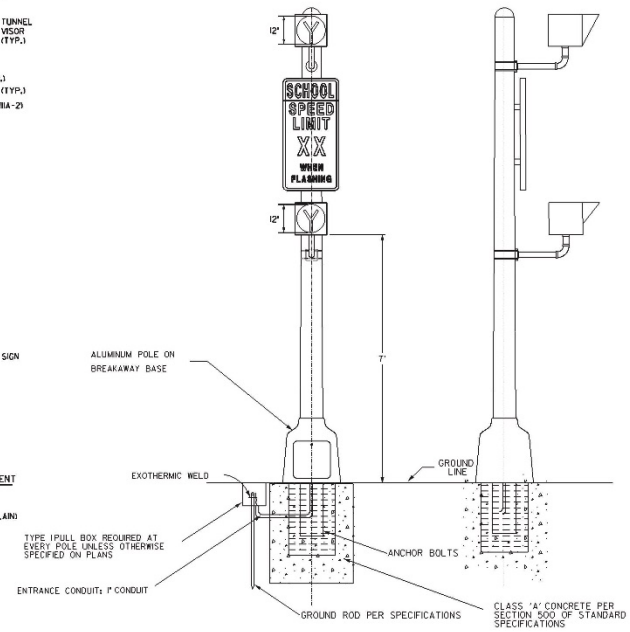

PEDESTRIAN POLE MOUNTED
FLASHING SCHOOL SIGNAL

STANDARD SIGN SUMMARY GENERAL NOTES

1. ALL STANDARD HIGHWAY SIGNS SHALL BE FABRICATED AND ERECTED IN ACCORDANCE WITH THE DETAILS SHOWN IN THE PLANS, THE MANUAL ON UNIFORM TRAFFIC CONTROL DEVICES, CURRENT EDITION, AND THE GEORGIA STANDARD SPECIFICATIONS, SUPPLEMENTAL SPECIFICATIONS, AND/OR SPECIAL PROVISIONS.

2. ALL STANDARD HIGHWAY SIGNS SHALL BE ERECTED AT A HEIGHT OF 7 FEET ABOVE THE NORMAL EDGE OF PAVEMENT TO THE BOTTOM OF THE SIGN OR ASSEMBLY.

3a. HORIZONTAL CLEARANCE FOR STANDARD HIGHWAY SIGNS ON INTERSTATE HIGHWAYS SHALL BE 32 FEET FROM THE NORMAL EDGE OF PAVEMENT TO THE NEARER EDGE OF THE SIGN(S), UNLESS SPECIFIED OTHERWISE IN THE PLANS. HORIZONTAL CLEARANCE FOR STANDARD HIGHWAY SIGNS ON RAMPS SHALL BE 2 FEET FROM THE NORMAL EDGE OF PAVED SHOULDER, OR EDGE OF GRADED SHOULDER WHEN PRESENT.

3b. HORIZONTAL CLEARANCE FOR STANDARD HIGHWAY SIGNS ON ALL OTHER ROADWAYS SHALL BE 6 FEET FROM THE EDGE OF PAVED SHOULDER OR 12 FEET FROM THE NORMAL EDGE OF PAVEMENT TO THE NEARER EDGE OF THE SIGN(S), WHICHEVER IS GREATER. THE HORIZONTAL CLEARANCE IN NON-MOUNTABLE CURB SECTIONS SHALL BE AT LEAST 2 FEET FROM THE CURB FACE TO THE NEARER EDGE OF THE SIGN(S).

3c. HORIZONTAL CLEARANCE FOR STANDARD HIGHWAY SIGNS MOUNTED BEHIND GUARD RAIL SHALL BE 6 FEET FROM THE FACE OF THE GUARD RAIL TO THE NEARER EDGE OF THE SIGN(S).

4. TYPE III (ENCAPSULATED LENS) REFLECTIVE SHEETING SHALL BE USED FOR ALL STANDARD HIGHWAY SIGNS REQUIRING RETROREFLECTIVE BACKGROUNDS EXCEPT AS SPECIFIED BELOW OR SPECIFIED OTHERWISE IN THE PLANS. EITHER CLASS 1 OR CLASS 2 ADHESIVE BACKING IS PERMISSIBLE.

5. TYPE XI (VERY HIGH INTENSITY) YELLOW GREEN FLUORESCENT BACKGROUND SHALL BE USED FOR SCHOOL WARNING SIGNS, INCLUDING THE "SCHOOL" PORTION OF THE SCHOOL SPEED LIMIT (S5-1) SIGN, AND INCLUDING ANY SUPPLEMENTAL PLAQUES USED IN ASSOCIATION WITH THESE WARNING SIGNS, SHALL USE TYPE XI (VERY HIGH INTENSITY) YELLOW-GREEN FLUORESCENT BACKGROUND WITH A BLACK LEGEND AND BORDER UNLESS OTHERWISE NOTED IN THE M. U. T. C. D.

6. REFER TO GDOT TRAFFIC SIGNAL STANDARD DETAILS AND GDOT STANDARD SPECIFICATIONS 647 AND 925.

7. DETAILS SHOWN IS FOR WOOD POST AND ALUMINUM POLE. GALVANIZED SQUARE TUBE STEEL POST MAY BE SUBSTITUTED. REFER TO STANDARD SPECIFICATIONS SECTION 911. GALVANIZED SQUARE TUBE POSTS MAY BE USED AS APPROVED BY THE DEPARTMENT OF TRANSPORTATION ENGINEER.

8. IF WARNING BEACONS HAVE MORE THAN ONE SIGNAL SECTION, THEY SHALL FLASH ALTERNATELY.

9. SUBMIT ALTERNATE MOUNTING METHODS, TO THE OFFICE OF TRAFFIC OPERATIONS FOR APPROVAL PRIOR TO FABRICATION AND INSTALLATION.

Guidelines For Usage On Metric Projects

When these details are incorporated into plans and or projects that are being prepared or constructed in metric units, exact or precise conversion to metric units is not required. The dimensions shown that are in feet and inches may be converted to corresponding metric units using the following "Rounded-Off" conversion factors: 1" =25mm, 4"=100mm, and 12" or 1' =300mm. All measurement notes that refer to linear feet and square yards shall be interpreted to mean linear meters and square meters.

REV. BY:	REVISION DESCRIPTION	DATE

DEPARTMENT OF TRANSPORTATION
STATE OF GEORGIA

TRAFFIC SIGNAL DETAIL

FLASHING SCHOOL ASSEMBLY
POST MOUNTED INSTALLATION

FEBRUARY 2012

NOT TO SCALE • REFER TO PLANS

DETAIL NUMBER
TS-12B

Section 652—Painting Traffic Stripe

652.1 General Description

This work includes furnishing and applying reflectorized high build standard and high build wet weather traffic line paint according to the Plans and these Specifications. This Item also includes applying words and symbols according to Plan details, Specifications, and the current Manual on Uniform Traffic Control Devices.

652.1.01 Definitions

Painted Stripes: Solid or broken (skip) lines. The location and color are designated on the Plans. Skip Traffic Stripes: Painted segments with unpainted gaps as specified on the Plans. The location and color are designated on the Plans.

652.1.02 Related References

A. Standard Specifications

General Provisions 101 through 150.
Section 656—Removal of Pavement Markings
Section 870 – Paint
EPA Method 3052
EPA Method 6010

B. Referenced Documents

ASTM	ASTM	Other
D711	E4941	AASHTO M 247
D3335	E1710	QPL 46, QPL 71
D3718	E2177	SOP 39
D4144		TT-P-1952E

652.1.03 Submittals

General Provisions 101 through 150.

652.2 Materials

Ensure that materials for painting traffic stripe, words, and symbols meet the following requirements:

A. Traffic Line Paint

Material	Section

Traffic Line Paint 6A and 6B	870.2.02.A.4 and 870.2.02.A.5

Glass Spheres and Reflective Composite Optics
Use glass spheres and/or reflective composite optics for the reflective media system that ensures the high build paint pavement markings meet the reflectance performance requirements in Subsection 652.3.06. Do not use glass spheres and/or reflective composite optics containing greater then 200 ppm total arsenic, 200 ppm total antimony, or 200 ppm total lead when tested according to the most recent US EPA Methods 3052 and 6010, or other approved methods.
Ensure glass spheres meet the requirements of AAHTO M 247. Use glass spheres produced from an approved source listed on QPL 71. Glass beads conforming to an alternative gradation may be used provided all other requirements of AASHTO M 247 and this specification are met. Obtain approval from the Office of Materials to use alternate gradations.

652.2.01 Delivery, Storage, and Handling

A. Storage
Ensure the paint does not cake, liver, thicken, curdle, gel, or show any other objectionable properties after storage for six months above 32 °F (0 °C).

B. Handling
Mix thoroughly before use.

652.3 Construction Requirements

652.3.01 Personnel
General Provisions 101 through 150.

652.3.02 Equipment

A. Traveling Traffic Stripe Painter
Use a traffic stripe painter that can travel at a predetermined speed both uphill and downhill, applying paint uniformly.
Ensure that the painter feeds paint under pressure through nozzles spraying directly onto the pavement.
Use a paint machine equipped with the following:

1. Three adjacent spray nozzles capable of simultaneously applying separate stripes, either solid or skip, in any pattern.

2. Nozzles equipped with the following:

- Cutoff valves for automatically applying broken or skip lines
- A mechanical bead dispenser that operates simultaneously with the spray nozzle to uniformly distribute glass spheres and/or reflective composite optics at an application rate to meet the reflectance performance requirements in Subsection 652.3.06.
- Line-guides consisting of metallic shrouds or air blasts

3. Tanks with mechanical agitators

4. Small, portable applicators or other special equipment as needed

B. Hand Painting Equipment
Use brushes, templates, and guides when hand painting.

C. Cleaning Equipment
Use brushes, brooms, scrapers, grinders, high-pressure water jets, or air blasters to remove dirt, dust, grease, oil, and other foreign matter from painting surfaces without damaging the underlying pavement.

652.3.03 Preparation
Locate approved paint manufacturers on QPL 46.

Before starting each day's work, thoroughly clean paint machine tanks, connections, and spray nozzles, using the appropriate solvent.

Thoroughly mix traffic stripe paint in the shipping container before putting it into machine tanks.

Before painting, thoroughly clean pavement surfaces of dust, dirt, grease, oil, and all other foreign matter.

652.3.04 Fabrication
General Provisions 101 through 150.

652.3.05 Construction

A. Alignment
Ensure that the traffic stripe is the specified length, width, and placement. On sections where no previously applied markings are present, ensure accurate stripe location by establishing control points at spaced intervals. The Engineer will approve control points.

B. Application
Apply traffic stripe paint by machine. If areas or markings are not adaptable to machine application, use hand equipment.

1. Application Rate

Paint will be subject to application rate checks.
Apply 5 in (125 mm) wide traffic stripe at the following minimum rates:

a. Solid Traffic Stripe Paint: At least 34 gal/mile (80 L/km)
b. Skip Traffic Stripe Paint: At least 10 gal/mile (24 L/km)

NOTE: Change minimum rate proportionately for varying stripe widths.

2. Thickness
Maintain a 25 mils (0.58mm) minimum wet average thickness above the surface of the pavement.

3. Do not apply paint to areas of pavement when:
- The surface is moist or covered with foreign matter.
- Air temperature in the shade is below 50 °F (10 °C)
- Wind causes dust to land on prepared areas or blows paint and glass spheres and/or reflective composite optics around during application

4. Apply a layer of glass spheres and/or reflective composite optics immediately after laying the paint. Apply glass spheres and/or reflective composite optics at a rate to meet the reflectance performance requirements in Subsection 652.3.06.

C. Protective Measures
Protect newly applied paint as follows:
1. Traffic

Control and protect traffic with warning and directional signs during painting. Set up warning signs before beginning each operation and place signs well ahead of the painting equipment. When necessary, use a pilot car to protect both the traffic and the painting operation.

2. Fresh Paint

Protect the freshly painted stripe using cones or drums. Repair stripe damage or pavement smudges caused by traffic according to Subsection 652.3.06.

D. Appearance and Tolerance of Variance
Continually deviating from stated dimensions is cause for stopping the work and removing the nonconforming stripe.
(See Section 656—Removal of Pavement Markings.) Adhere to the following

measurements:

1. Width

   Do not lay stripe less than the specified width. Do not lay stripe more than 1/2 in (13 mm) over the specified width.

2. Length

   Ensure that the 10 ft. (3 m) painted skip stripe and the 30 ft. (10 m) gap between painted segments vary no more than ± 1 ft. (300 mm) each.

3. Alignment

   a. Ensure that the stripe does not deviate from the intended alignment by more than 1 in (25 m) on straight lines or curves of 1 degree or less.

   b. Ensure that the stripe does not deviate by more than 2 in (50 mm) on curves exceeding 1 degree.

652.3.06 Quality Acceptance

A. General

For a minimum of 30 days from the time of placement, ensure the high build traffic paint pavement marking material shows no signs of failure due to blistering, excessive cracking, shipping, bleeding, staining, discoloration, oil content of the pavement materials, smearing or spreading under heat, deterioration due to contact with grease deposits, oil, diesel fuel, or gasoline drippings, spilling, poor adhesion to the pavement material, vehicular damage, and normal wear. In the event that failures mentioned above occur, ensure corrective work is completed at no additional cost to the Department. Obtain pavement marking retroreflectivity values with a 30 meter geometry retroreflectometer.

B. Initial Retroreflectivity

1. Longitudinal Lines

   Within 30 days of installation, ensure the in-place markings meet the following minimum reflectance values:

   a. High Build Wet Weather Traffic Paint

	White	**Yellow**
Dry (ASTM E 1710)	300 mcd/lux/m^2	250 mcd/lux/m^2
Wet recovery (ASTM E 2177)	150 mcd/lux/m^2	100 mcd/lux/m^2

   b. High Build Standard Traffic Paint

	White	**Yellow**
Dry (ASTM E 1710)	300 mcd/lux/m^2	250 mcd/lux/m^2

For each center line, edge line, and skip line, measure retroreflectivity 9 times for each mile; 3 times within the first 500 feet, 3 times in the middle, and 3 times

within the last 500 feet. For projects less than one mile in length, measure retroreflectivity 9 times as above. Record all retro reflectivity measurements on the form OMR CVP 66 in SOP 39.

2. Messages, Symbols, and Transverse Lines

Within 30 days of installation, ensure the in-place markings when tested according to ASTM E 1710 meet the following minimum reflectance value of 275 mcd/lux/m2. Perform at a minimum, one retroreflectivity measurement at one message, one symbol and one transverse line per intersection. Take one measurement per mile for locations other than intersections (i.e. school messages, railroad messages, bike symbols etc.)

C. Six Month Retroreflectivity (Longitudinal Lines)

Maintain the following minimum reflectance values for 180 days after installation:

a. High Build Wet Weather Traffic Paint

	White	**Yellow**
Dry (ASTM E 1710)	300 mcd/lux/m^2	250 mcd/lux/m^2
Wet recovery (ASTM E 2177)	150 mcd/lux/m^2	100 mcd/lux/m^2

b. High Build Standard Traffic Paint

	White	**Yellow**
Dry (ASTM E 1710)	300 mcd/lux/m^2	250 mcd/lux/m^2

Retest the in-place markings according to Subsection 652.3.06.B.1, 180 days after installation to ensure these minimum retroreflectance values are maintained.

NOTE: The Contractor is responsible for retroreflectivity testing. Furnish initial test results to the Engineer within 30 days of application. Furnish 6 month test results to the Engineer within 180 days of application or prior to final acceptance, whichever comes first.

D. Thickness

At the time of installation, check the thicknesses on all skip lines, edge lines and center lines according to ASTM D 4114. For each center line, edge line, and skip line, measure thickness above the pavement 3 times for each mile; once within the first 500 feet, once in the middle, and once within the last 500 feet. For projects less than one mile in length, measure the thickness above the pavement 3 times.

Record thickness measurements on the form OMR CVP 66 in SOP 39.

Submit results to the Engineer.

E. Corrective Work

For each mile section, if paint stripe fails to meet Plan details or Specifications or deviates from stated dimensions, correct it at no additional cost to the Department. If removal of pavement markings is necessary, perform it according to Section 656 and place it according to this Specification. No additional payment will be made for removal and replacement of unsatisfactory striping. Ensure corrective work is completed at no additional cost to the Department. Perform testing according to this Specification. Any retest due to failures will be performed at no additional cost to the Department. Furnish all test reports to the Department.

Retroreflectivity and Thickness Longitudinal Line Deficiency: A deficiency will ensure when two or more Location Average results as recorded on form OMR CVP 66 within a One-Mile Section do not meet the performance criteria herein. The entire line within this one mile section will be determined to be deficient. If the evaluated section is less than 1.0 mile, a single Location Average result not meeting the performance criteria herein will result in the entire line to be determined to be deficient.

Retroreflectivity Transverse Markings and Symbol Deficiency: A single Location Average result on the marking or symbol not meeting the performance criteria herein will result in the marking or symbol to be determined to be deficient.

F. Acceptance Criteria

Ensure that stripes and segments of stripes are clean-cut and uniform. Markings that do not appear uniform or satisfactory, either during the day or night, or do not meet Specifications, will be corrected at the Contractor's expense.
Paint will be subject to application rate checks.

1. When correcting a deviation that exceeds the permissible tolerance in alignment, do the following:
    a. Remove the affected portion of stripe, plus an additional 25 ft. (8 m) in each direction according to Section 656—Removal of Pavement Markings.
    b. Paint a new stripe according to these Specifications.

2. Removal of Excess Paint

    Remove misted, dripped, or spattered paint to the Engineer's satisfaction. Do not damage the underlying pavement during removal.

    Refer to the applicable portions of Section 656—Removal of Pavement Markings.

652.3.07 Contractor Warranty and Maintenance
General Provisions 101 through 150.

652.4 Measurement
When traffic stripe is paid for by the square yard (meter), the number of square yards (meters) painted is measured and the space between stripes is included in the overall measurement.

Linear measurements are made on the painted surface by an electronic measuring device attached to a vehicle. On curves, chord measurements, not exceeding 100 linear feet (30 linear meters), are used.

Traffic stripe and markings, complete in place, are measured and accepted for payment as follows:
A. Solid Traffic Stripe
Solid traffic stripe is measured by the linear foot (meter), linear mile (kilometer), or square yard (meter). Breaks or omissions in solid lines or stripes at street or road intersections are not measured.
B. Skip Traffic Stripe
Skip traffic stripe is measured by the gross linear foot (meter) or gross linear mile (kilometer). Unpainted spaces between the stripes are included in the overall measurements if the Plan ratio of 1 to 3 remains uninterrupted. Measurement begins and ends on a stripe.
C. Pavement Markings
Markings are words and symbols completed according to Plan dimensions. Markings are measured by the unit.

652.4.01 Limits
General Provisions 101 through 150.

652.5 Payment
Payment will be full compensation for the work under this Section, including the following:

- Cleaning and preparing surfaces
- Furnishing materials, including paints, beads, and thinners
- Applying, curing, and protecting paints
- Protecting traffic, including providing and placing necessary warning signs
- Furnishing tools, machines, and other equipment necessary to complete the Item

Payment will be made under:

Item No. 652	Solid traffic stripe, _____ in (mm), (color)	Per linear mile (kilometer)
Item No. 652	Solid traffic stripe, _____ in (mm), (color)	Per gross linear mile (kilometer)
Item No. 652	Solid traffic stripe, _____ in (mm), (color)	Per linear foot (meter)
Item No. 652	Solid traffic stripe, _____ in (mm), (color)	Per gross linear foot (meter)
Item No. 652	Pavement markings, words, and symbols, (color)	Per each
Item No. 652	Traffic stripe, _____in (mm), (color)	Per square yard (meter)
Item No. 652	Solid traffic stripe, High Build Wet Weather, _____ in (mm), (color)	Per linear mile (kilometer)
Item No. 652	Skip traffic stripe, _____in (mm), (color)	Per gross linear mile (kilometer)
Item No. 652	Solid traffic stripe, High Build Wet Weather, _____ in (mm), (color)	Per linear foot (meter)
Item No. 652	Skip traffic stripe, _____in (mm), (color)	Per gross linear foot (meter)
Item No. 652	Pavement markings, words, and symbols, (color)	Per each
Item No. 652	Traffic stripe, High Build Wet Weather, _____in (mm), (color)	Per square yard (meter)